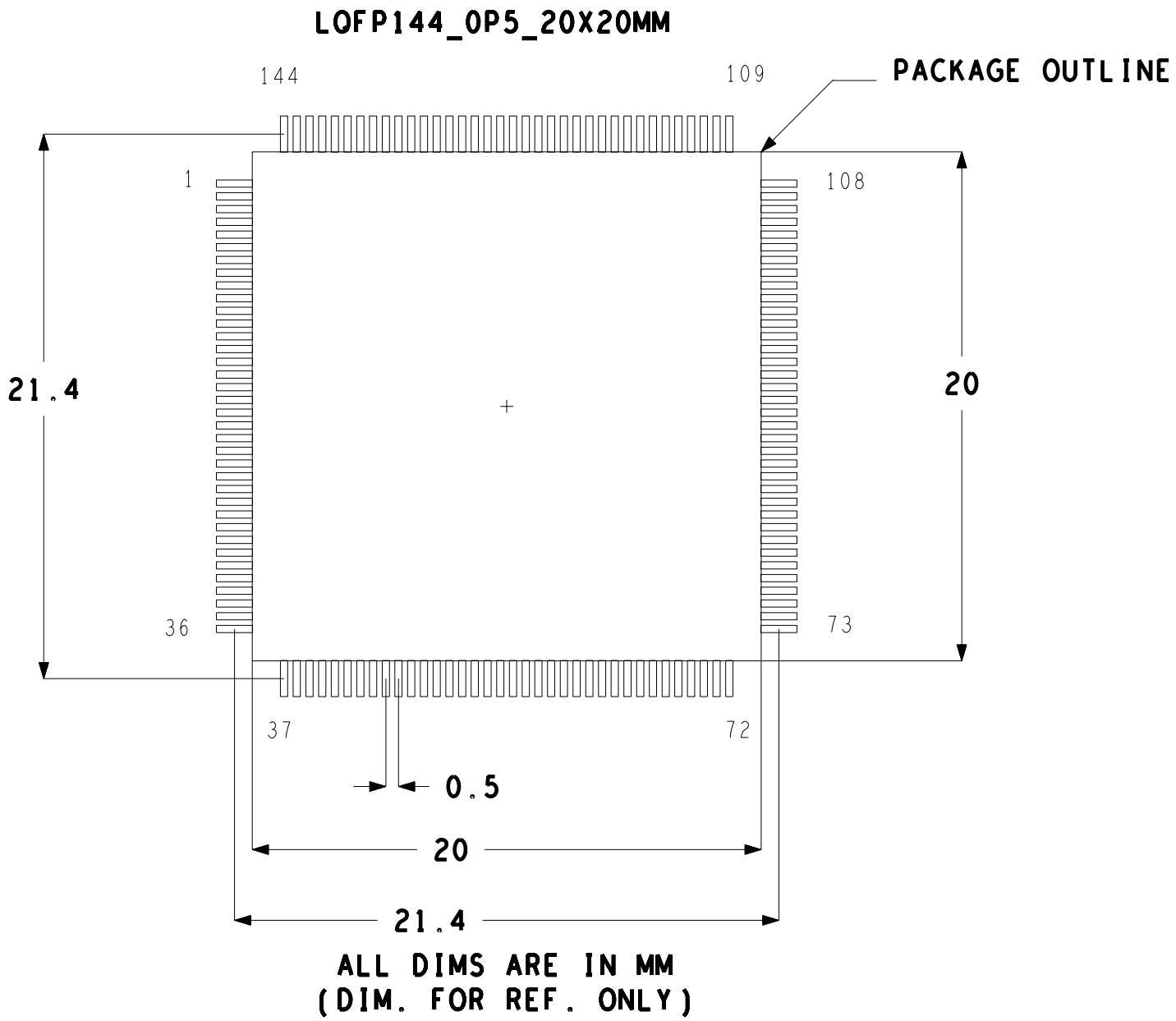
LQFP144_0P5_20X20MM
PACKAGE OUTLINE
144
109
1
108
36
73
37
72
21.4
20
0.5
20
21.4
ALL DIMS ARE IN MM
(DIM. FOR REF. ONLY)