Table of Contents

Page	Description
	Title Page
1	MPC8275 System
2	System Buffers
3	Expansion Buffers
4	BCSRs
5	FLASH and EEPROM Memories
6	SDRAM Memory
7	L2Cache
8	MPC8275 CPM
9	Fast Ethernet CPM MUX
10	UTOPIA 8 bits MUX
11	UTOPIA 16 Bit, RS232 & USB CPM Mux
12	ATM PHY
13	Fast-Ethernet PHYs
14	RS232
15	USB
16	PCI Connectors 1
17	PCI Connectors 2
18	Expansion Connectors (2 x 128 pin)
19	Logic Analyzer Connectors - Mictors
20	Pull-Up / Pull-Down Resistors
21	MPC8275 & ATM PHY Power
22	Parallel Port Interface
23	COP/JTAG Command Converter
24	Voltage Regulators, Leds
25	Power Connector, Power Switch debounce, General Parts

PQ2FADS-VR

MPC8275 MotherBoard

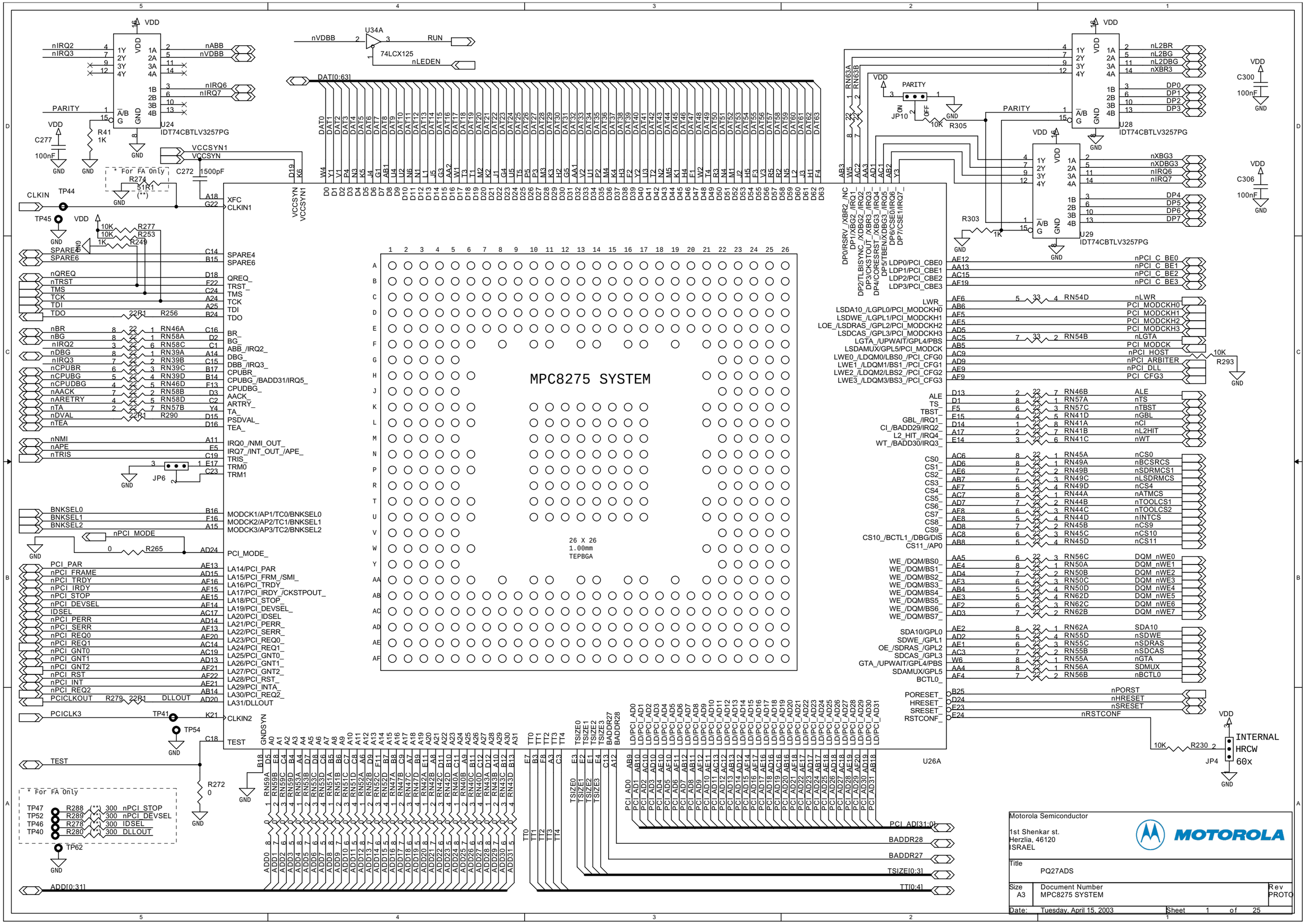
MPC8275 SYSTEM
26 X 26
1.00mm
TEPBGA
U26A
U24
IDT74CBTLV3257PG
U28
IDT74CBTLV3257PG
U29
IDT74CBTLV3257PG
U34A
74LCX125
DAT[0:63]
PCI_AD[31:0]
BADDR28
BADDR27
TSIZE[0:3]
TT[0:4]
ADD[0:31]
INTERNAL
HRCW
60x
JP4
JP6
JP10
* For FA Only
Motorola Semiconductor
1st Shenkar st.
Herzlia, 46120
ISRAEL
MOTOROLA
Title
PQ27ADS
Size
A3
Document Number
MPC8275 SYSTEM
Rev
PROTO
Date:
Tuesday, April 15, 2003
Sheet 1 of 25

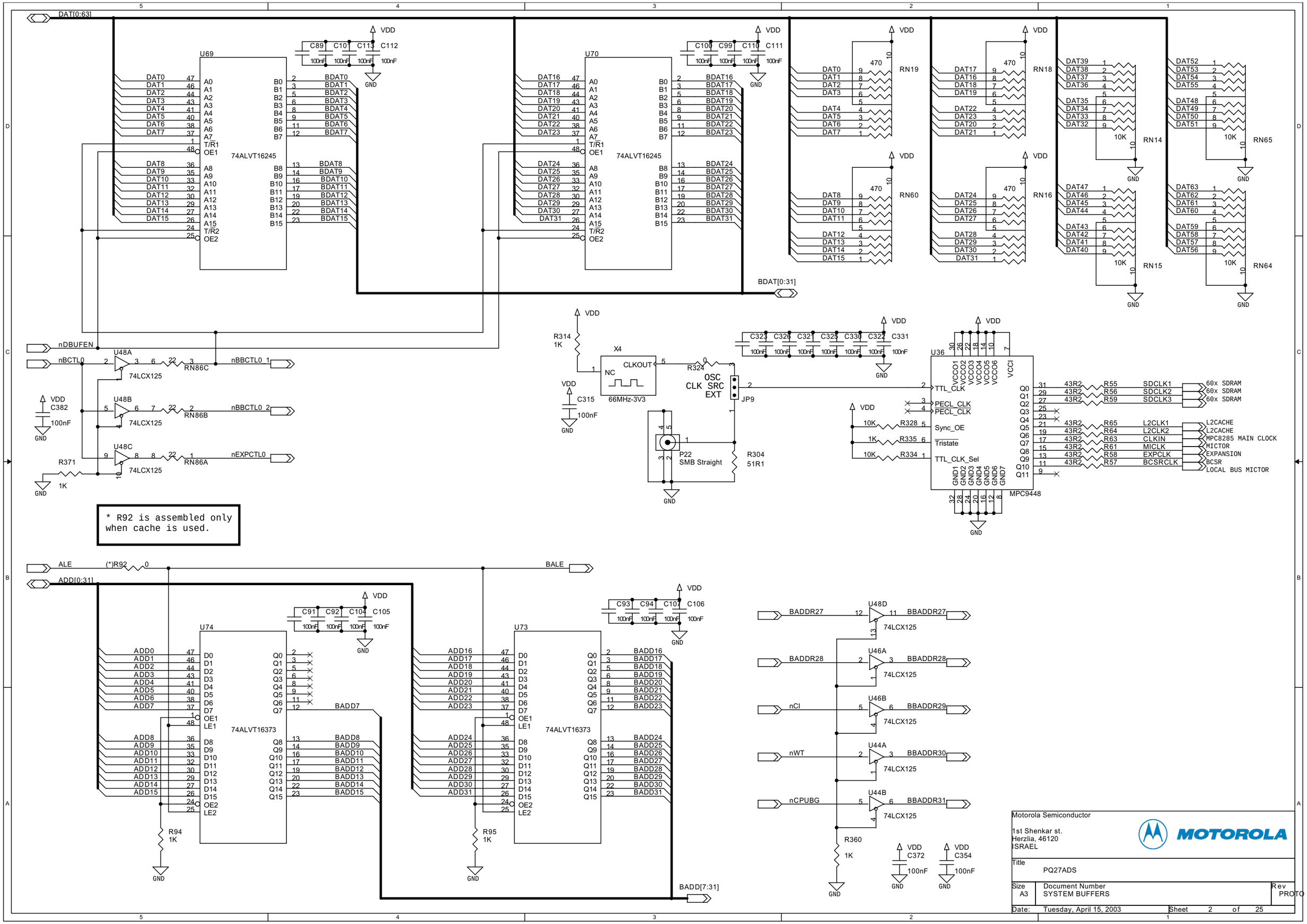
DAT[0:63]
U69
74ALVT16245
U70
74ALVT16245
BDAT[0:31]
RN19
RN18
RN14
RN65
RN60
RN16
RN15
RN64
nDBUFEN
nBCTL0
U48A
74LCX125
RN86C
nBBCTL0 1
U48B
RN86B
nBBCTL0 2
U48C
RN86A
nEXPCTL0
R371
1K
C382
100nF
X4
CLKOUT
NC
66MHz-3V3
R314
1K
C315
R324
OSC
CLK SRC
EXT
JP9
P22
SMB Straight
R304
51R1
U36
MPC9448
TTL_CLK
PECL_CLK
Sync_OE
Tristate
TTL_CLK_Sel
SDCLK1
SDCLK2
SDCLK3
60x SDRAM
L2CLK1
L2CLK2
CLKIN
MICLK
EXPCLK
BCSRCLK
L2CACHE
MPC8285 MAIN CLOCK
MICTOR
EXPANSION
BCSR
LOCAL BUS MICTOR
* R92 is assembled only when cache is used.
ALE
(*)R92
ADD[0:31]
BALE
U74
74ALVT16373
U73
74ALVT16373
BADD7
BADD[7:31]
R94
1K
R95
1K
BADDR27
BADDR28
nCI
nWT
nCPUBG
U48D
U46A
U46B
U44A
U44B
BBADDR27
BBADDR28
BBADDR29
BBADDR30
BBADDR31
R360
1K
C372
C354
Motorola Semiconductor
1st Shenkar st.
Herzlia, 46120
ISRAEL
MOTOROLA
Title
PQ27ADS
Size
A3
Document Number
SYSTEM BUFFERS
Rev
PROTO
Date:
Tuesday, April 15, 2003
Sheet 2 of 25

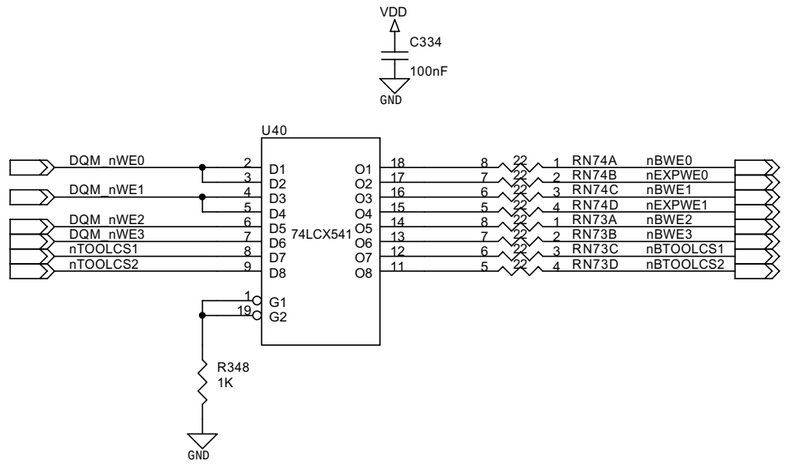

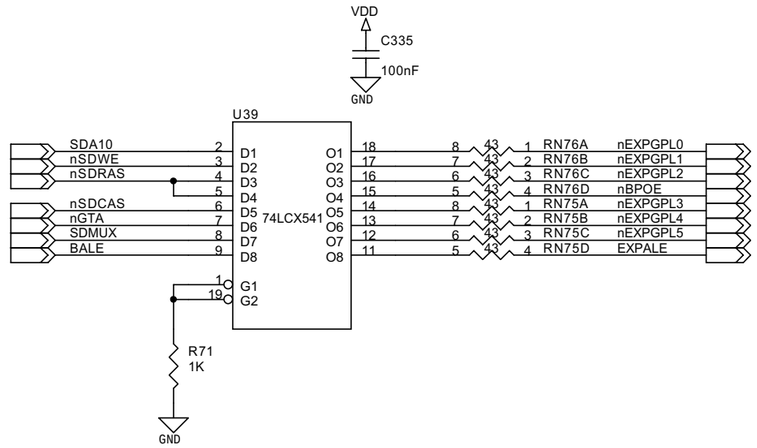

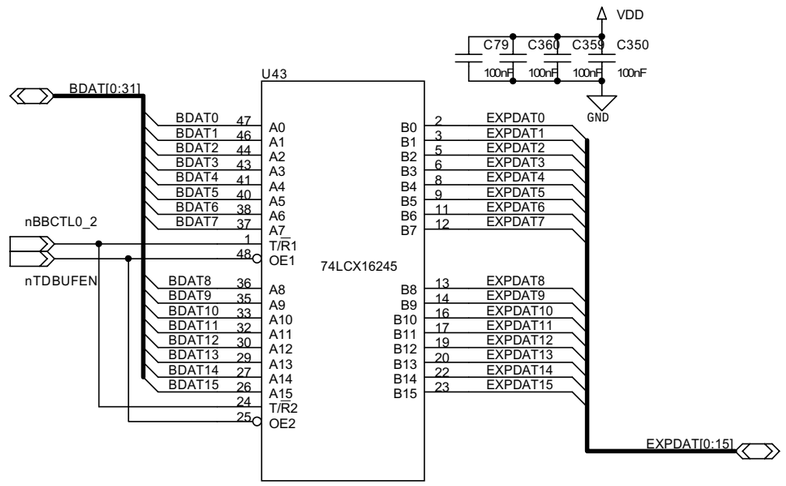

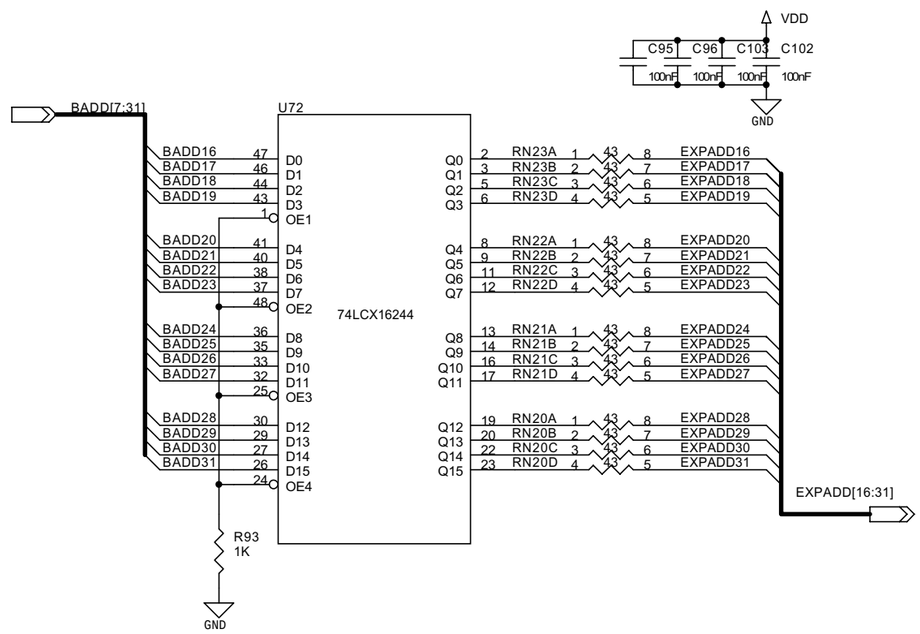

Motorola Semiconductor

1st Shenkar st.
Herzlia, 46120
ISRAEL

MOTOROLA

Title	PQ27ADS	
Size A3	Document Number 60x EXPANSION BUFFERS	Rev PROTO
Date: Tuesday, April 15, 2003	Sheet 3 of 25	

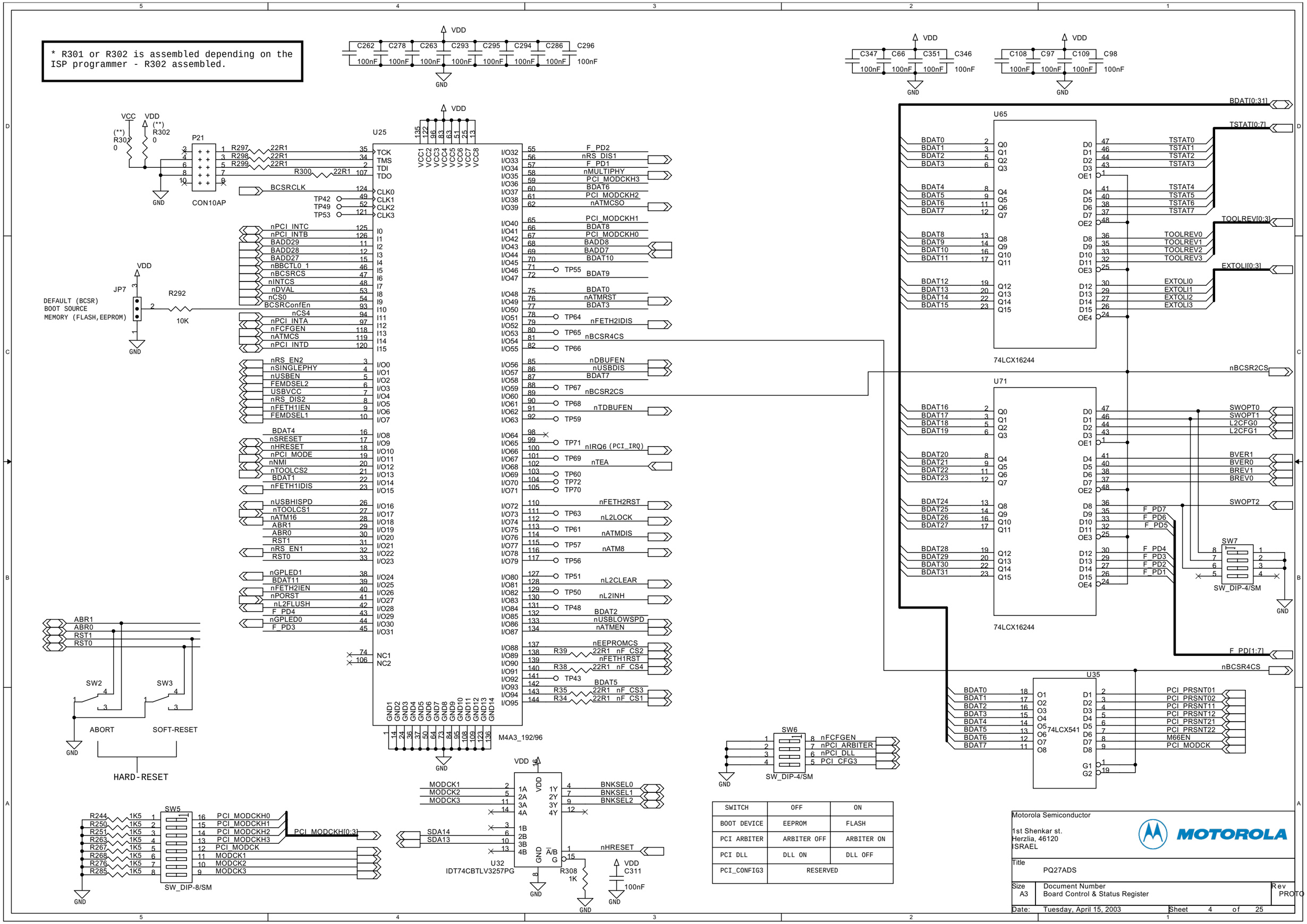

SWITCH	OFF	ON
BOOT DEVICE	EEPROM	FLASH
PCI ARBITER	ARBITER OFF	ARBITER ON
PCI DLL	DLL ON	DLL OFF
PCI_CONFIG3	RESERVED	

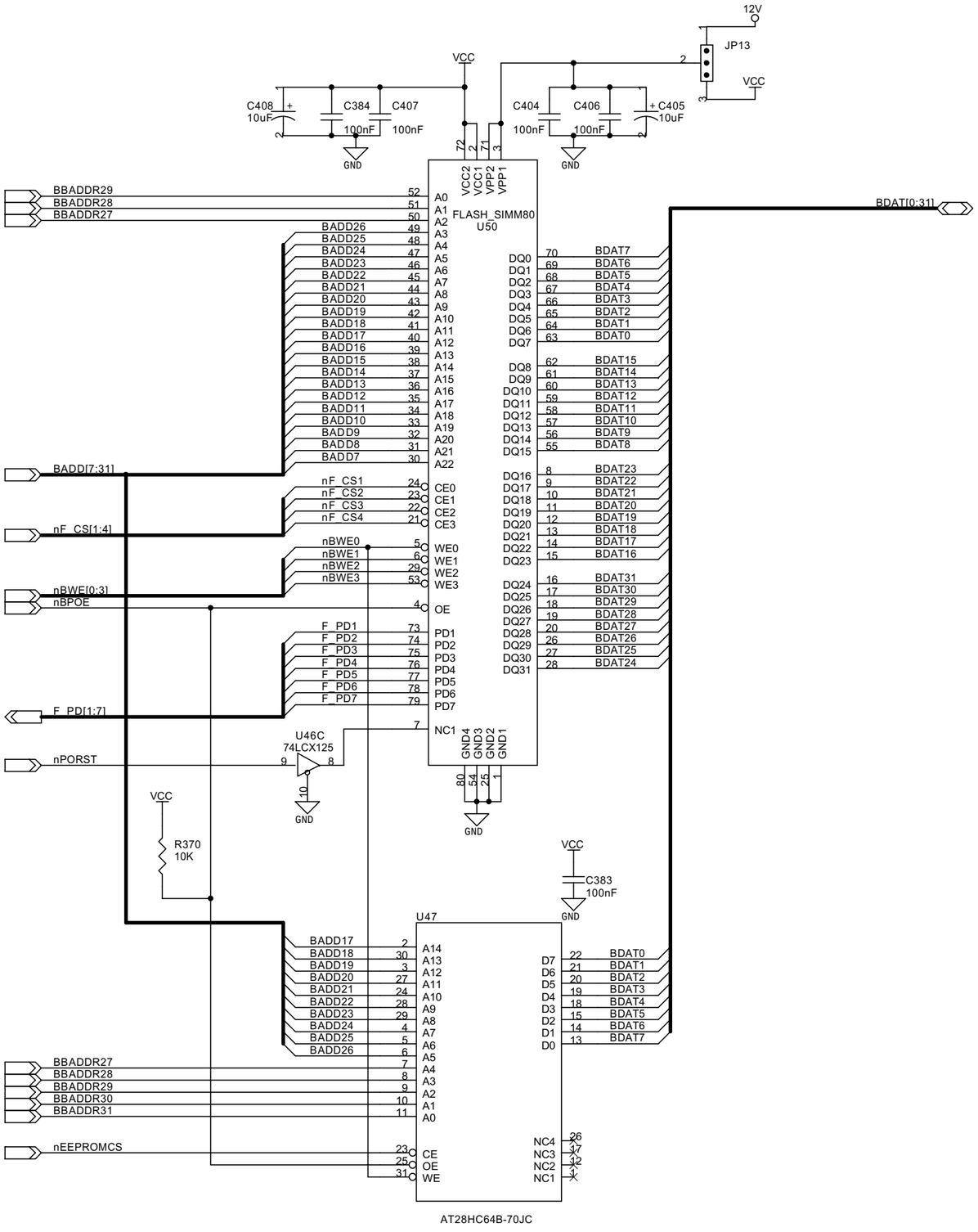

Motorola Semiconductor

1st Shenkar st.
Herzlia, 46120
ISRAEL

MOTOROLA

Title
PQ27ADS

Size	Document Number	Rev
A3	FLASH & EEPROM	PROTO

Date: Tuesday, April 15, 2003 Sheet 5 of 25

* RN77, RN79, RN80, RN81 are assembled if cache is not used - factory assembled.

* C328, C329, C336, C337, U43, RN10, RN11, RN12, R319, R320 are assembled if cache is used - not assembled.

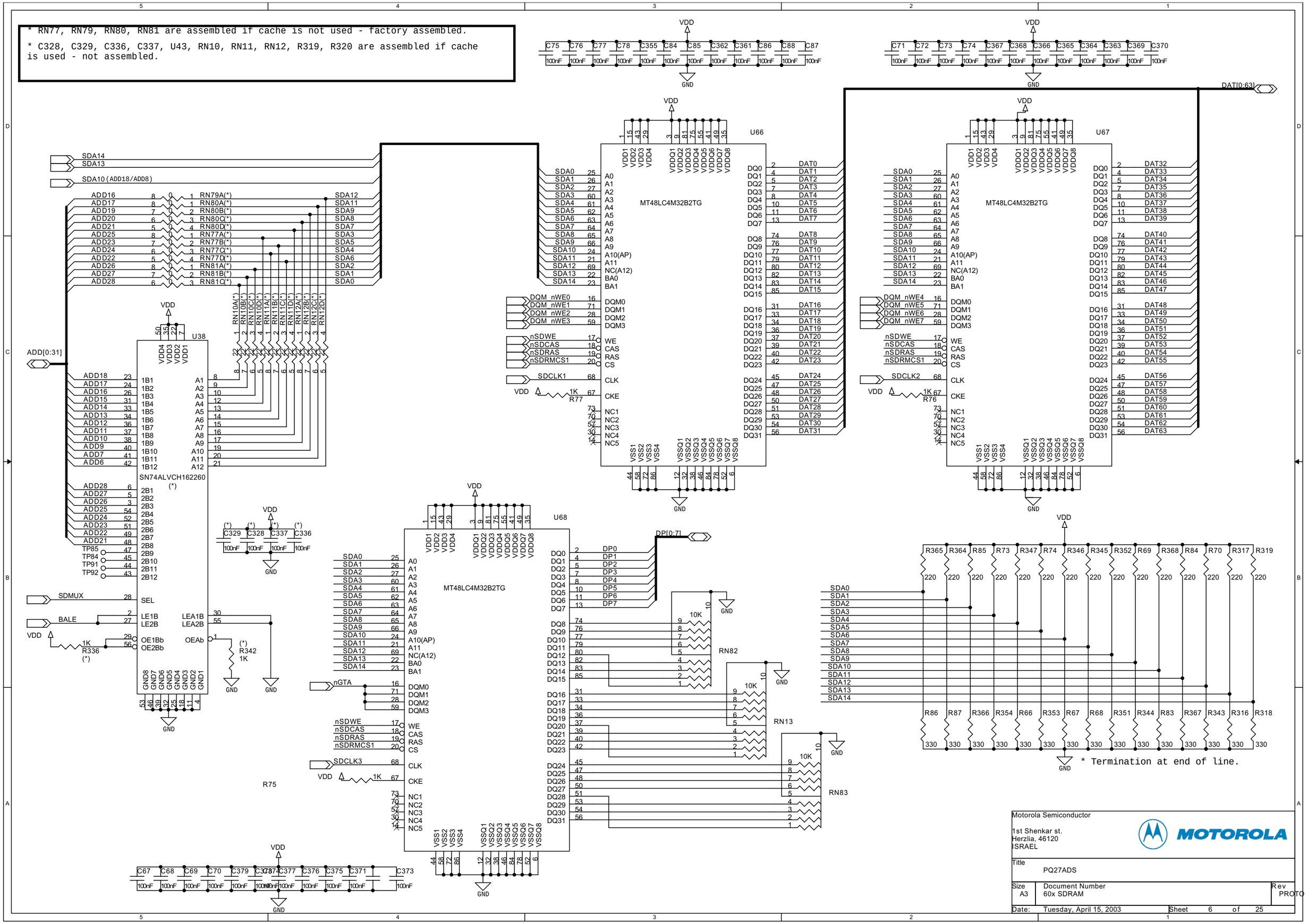

Motorola Semiconductor
1st Shenkar st.
Herzlia, 46120
ISRAEL

MOTOROLA

Title	PQ27ADS		
Size A3	Document Number 60x SDRAM		Rev PROTO
Date: Tuesday, April 15, 2003	Sheet 6 of 25		

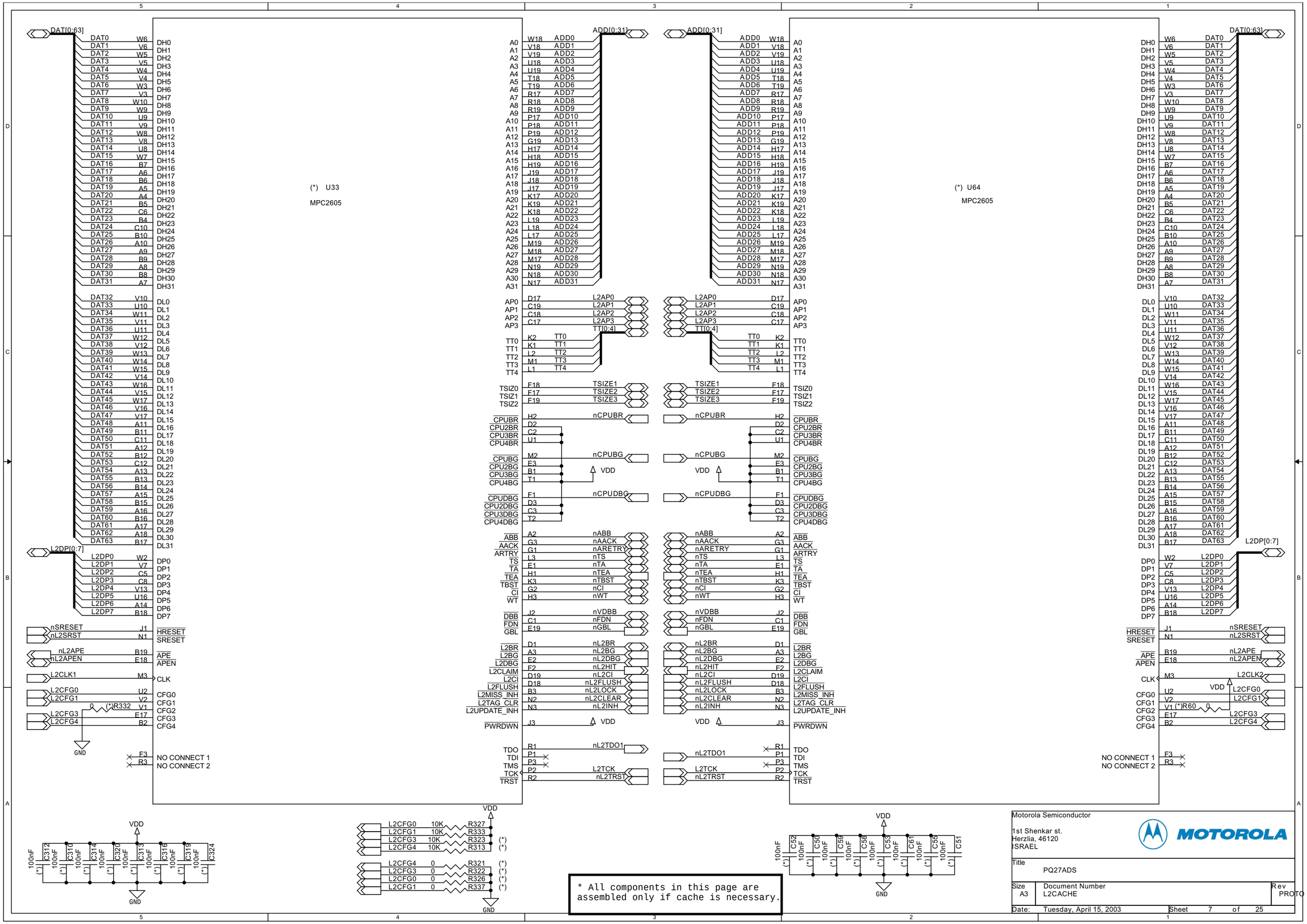

Motorola Semiconductor
1st Shenkar st.
Herzlia, 46120
ISRAEL

Title: PQ27ADS

Size	Document Number	Rev
A3	L2CACHE	PROTO

Date: Tuesday, April 15, 2003 Sheet 7 of 25

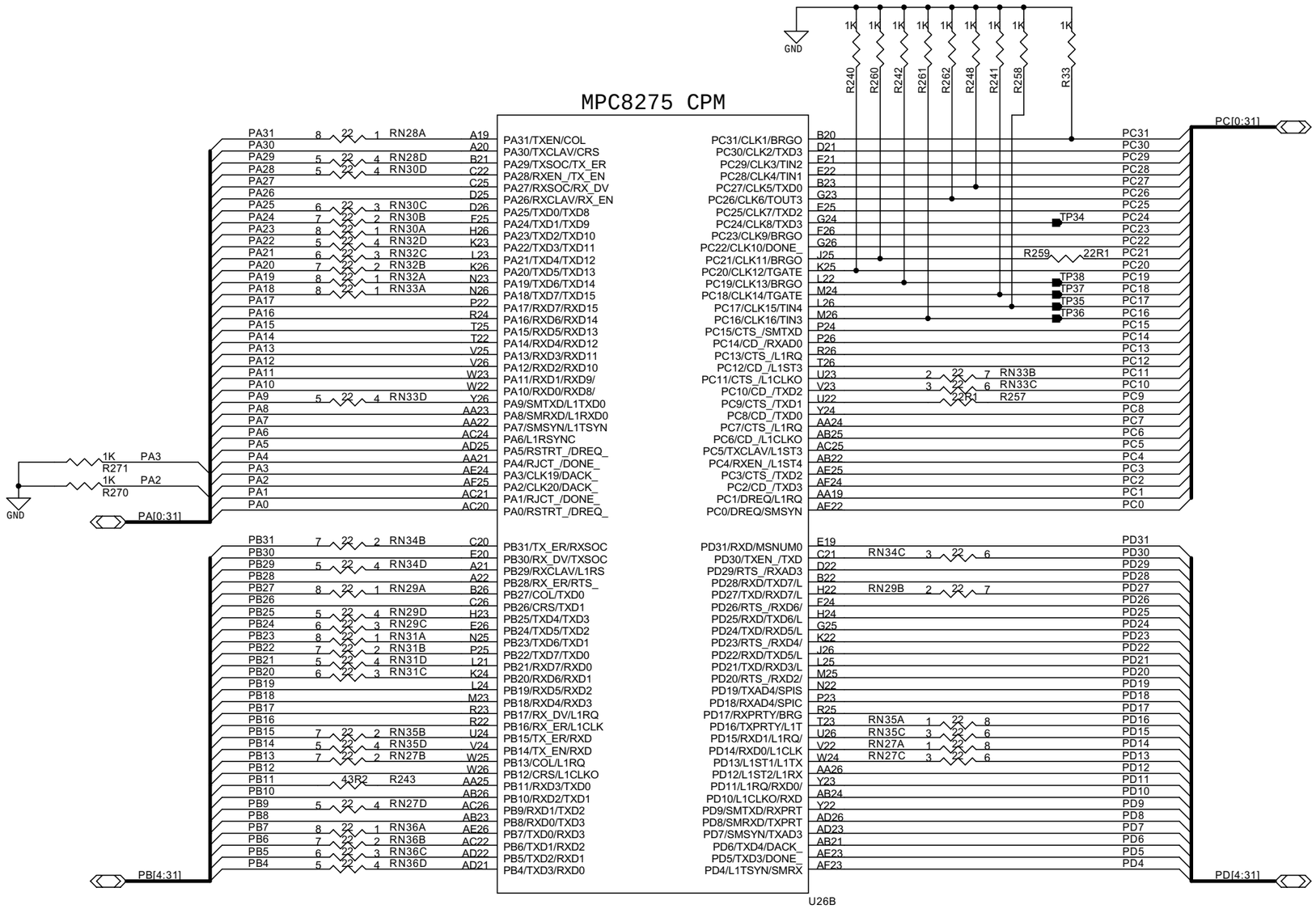

Motorola Semiconductor

1st Shenkar st.
Herzlia, 46120
ISRAEL

MOTOROLA

Title	PQ27ADS		
Size A3	Document Number MPC8275 - CPM		Rev PROTO
Date: Tuesday, April 15, 2003	Sheet 8 of 25		

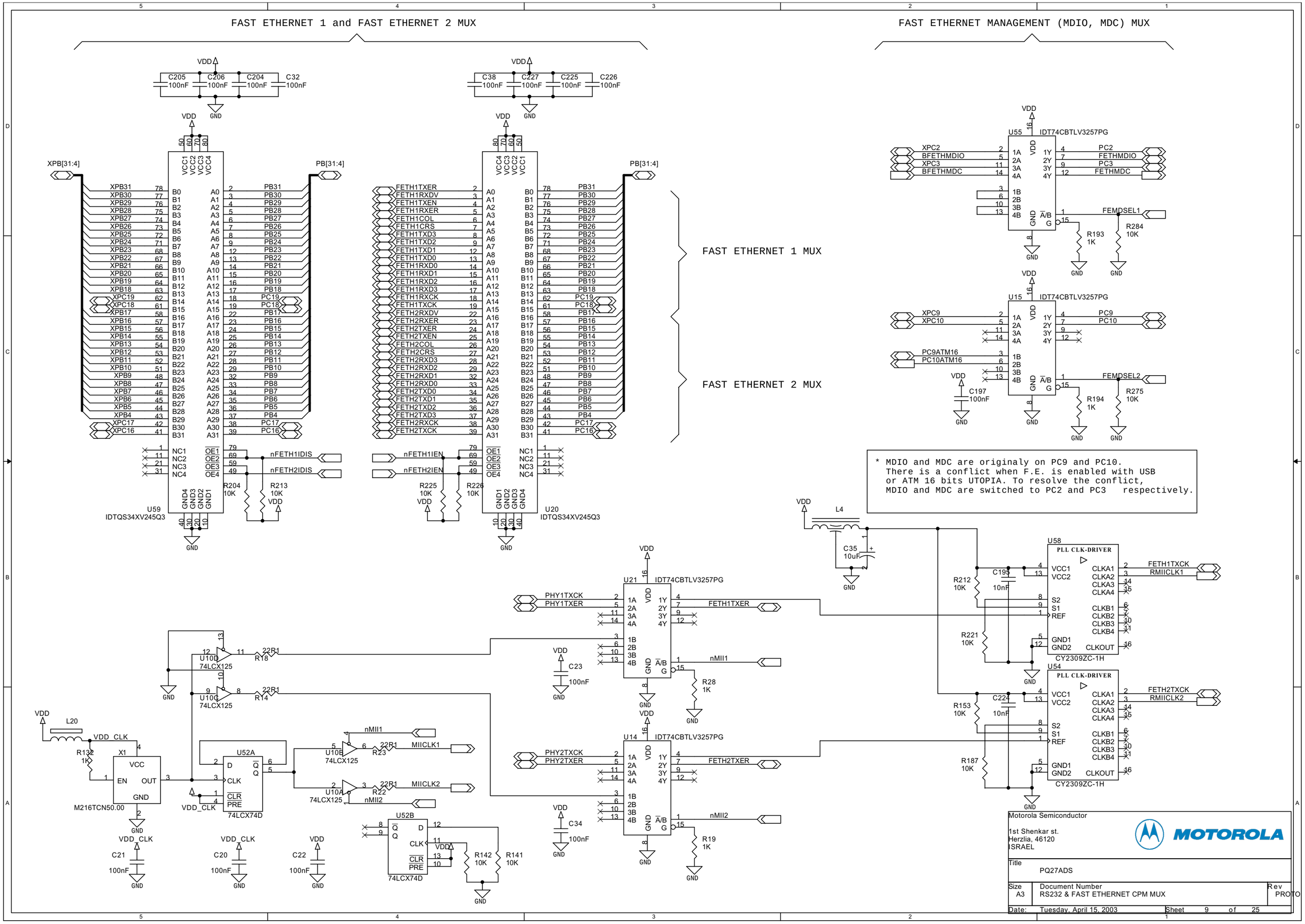
FAST ETHERNET 1 and FAST ETHERNET 2 MUX
FAST ETHERNET MANAGEMENT (MDIO, MDC) MUX
FAST ETHERNET 1 MUX
FAST ETHERNET 2 MUX
U59 IDTQS34XV245Q3
U20 IDTQS34XV245Q3
U55 IDT74CBTLV3257PG
U15 IDT74CBTLV3257PG
U21 IDT74CBTLV3257PG
U14 IDT74CBTLV3257PG
U58 PLL CLK-DRIVER CY2309ZC-1H
U54 PLL CLK-DRIVER CY2309ZC-1H
U10D 74LCX125
U10C 74LCX125
U10B 74LCX125
U10A 74LCX125
U52A 74LCX74D
U52B 74LCX74D
M216TCN50.00
* MDIO and MDC are originaly on PC9 and PC10.
There is a conflict when F.E. is enabled with USB
or ATM 16 bits UTOPIA. To resolve the conflict,
MDIO and MDC are switched to PC2 and PC3 respectively.
Motorola Semiconductor
1st Shenkar st.
Herzlia, 46120
ISRAEL
MOTOROLA
Title
PQ27ADS
Size A3
Document Number
RS232 & FAST ETHERNET CPM MUX
Rev PROTO
Date: Tuesday, April 15, 2003
Sheet 9 of 25

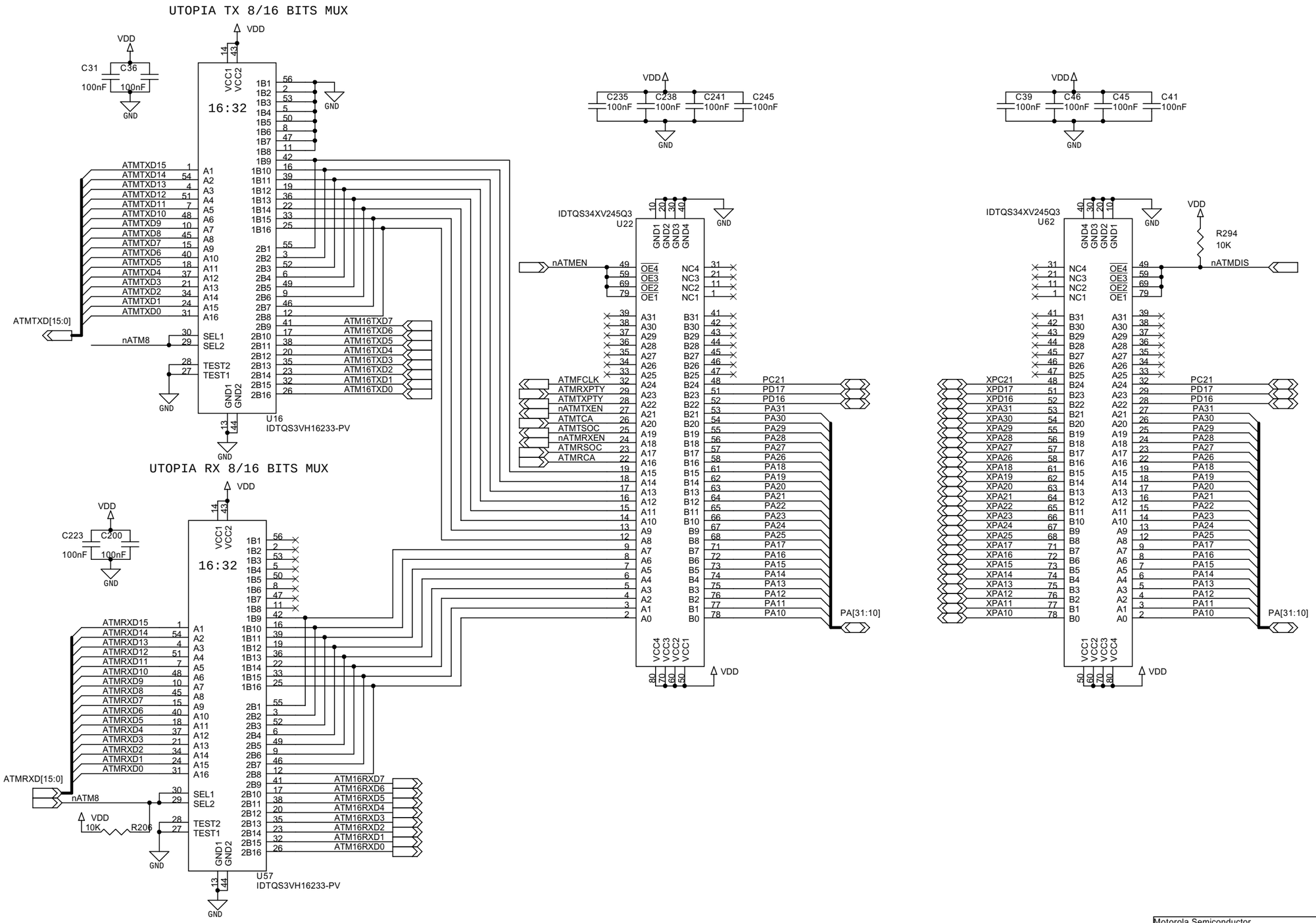

Motorola Semiconductor

1st Shenkar st.
Herzlia, 46120
ISRAEL

MOTOROLA

Title
PQ27ADS

Size	Document Number	Rev
A3	ATM 8 BITS CPM MUX	PROTO

Date: Tuesday, April 15, 2003 Sheet 10 of 25

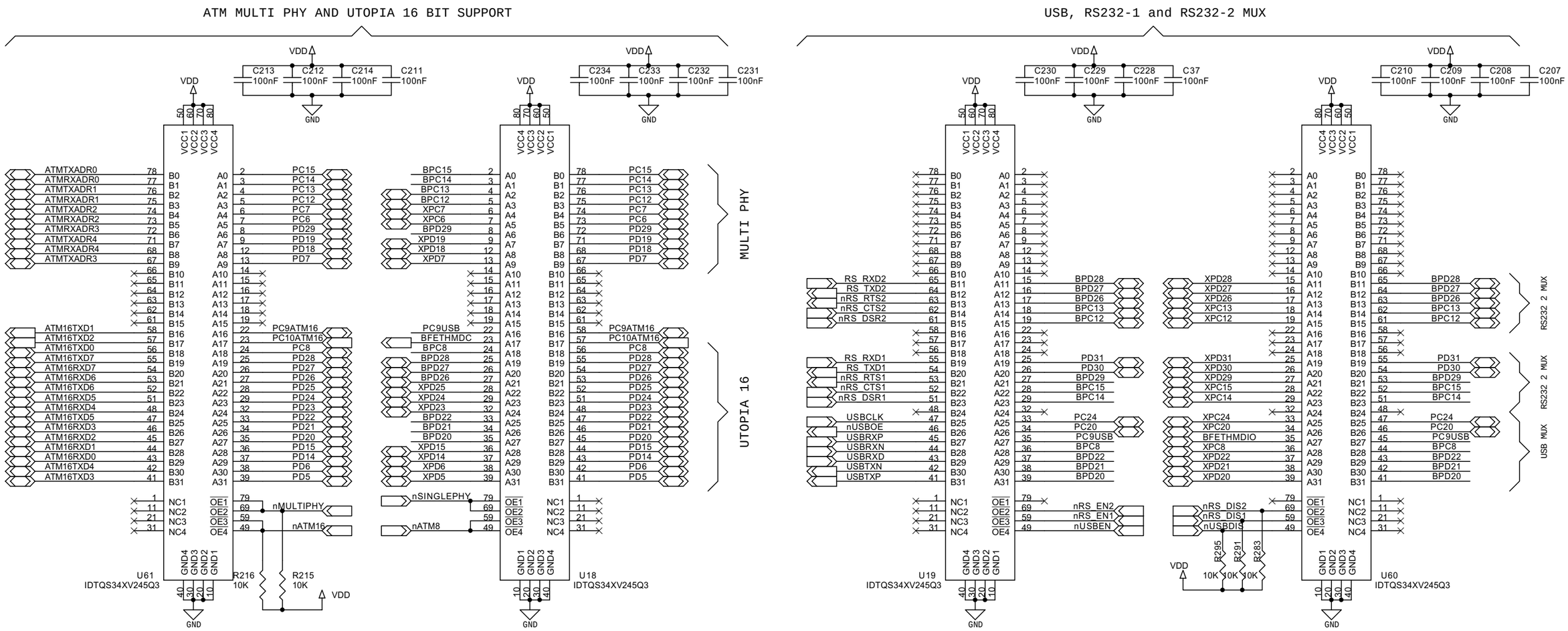

Motorola Semiconductor
1st Shenkar st.
Herzlia, 46120
ISRAEL

MOTOROLA

Title		
PQ27ADS		
Size A3	Document Number ATM 16 BITS, RS232 and USB CPM MUX	Rev PROTO
Date: Tuesday, April 15, 2003	Sheet 11 of 25	

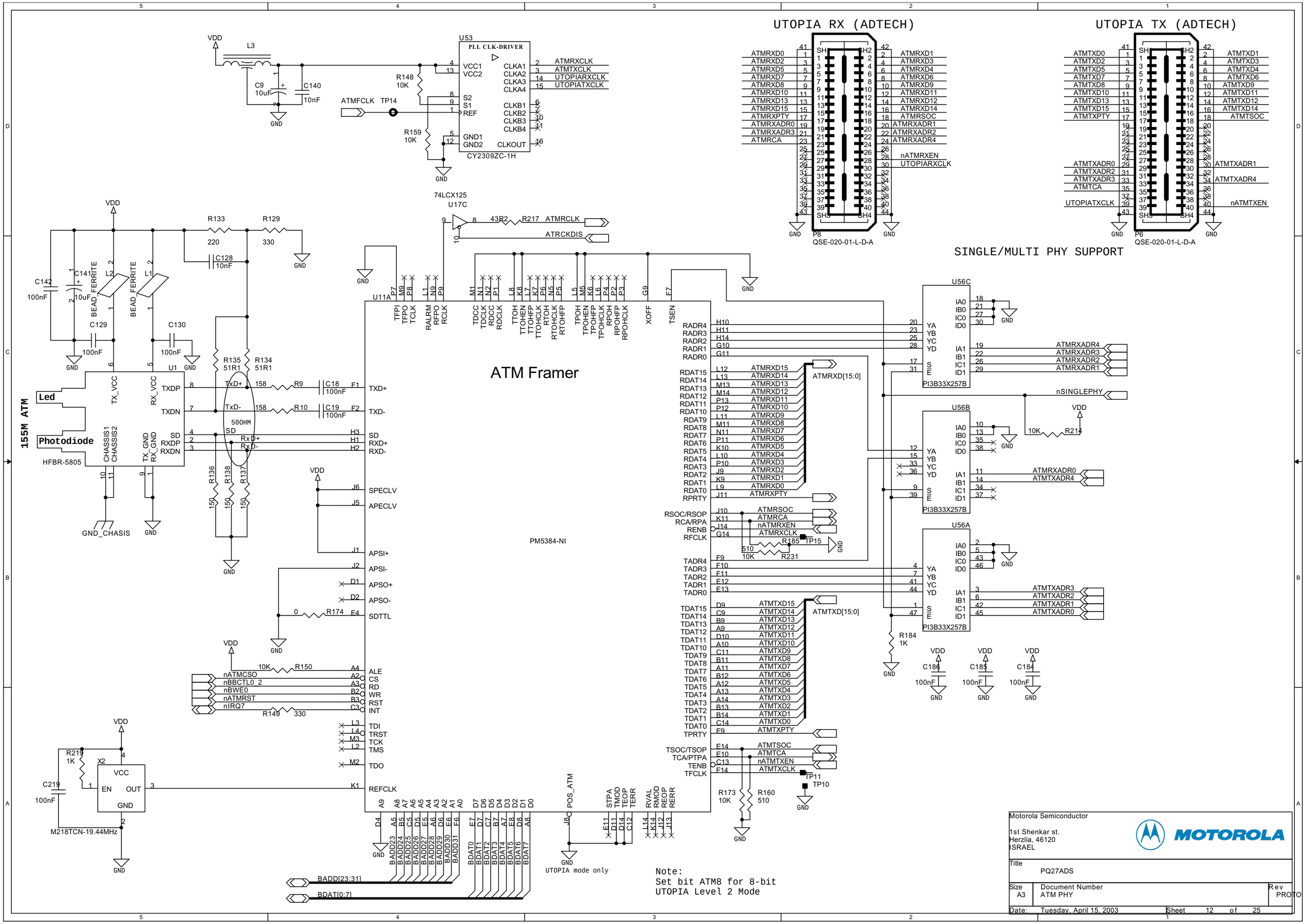
UTOPIA RX (ADTECH)
UTOPIA TX (ADTECH)
SINGLE/MULTI PHY SUPPORT
ATM Framer
PM5384-NI
155M ATM
Led
Photodiode
HFBR-5805
U53
PLL CLK-DRIVER
CY2309ZC-1H
74LCX125
U17C
U11A
U1
U56A
U56B
U56C
PI3B33X257B
P8
QSE-020-01-L-D-A
P6
QSE-020-01-L-D-A
ATMRXD[15:0]
ATMTXD[15:0]
BADD[23:31]
BDAT[0:7]
UTOPIA mode only
M218TCN-19.44MHz
GND_CHASSIS
Note:
Set bit ATM8 for 8-bit
UTOPIA Level 2 Mode
Motorola Semiconductor
1st Shenkar st.
Herzlia, 46120
ISRAEL
MOTOROLA
Title
PQ27ADS
Size A3
Document Number
ATM PHY
Rev PROTO
Date: Tuesday, April 15, 2003
Sheet 12 of 25

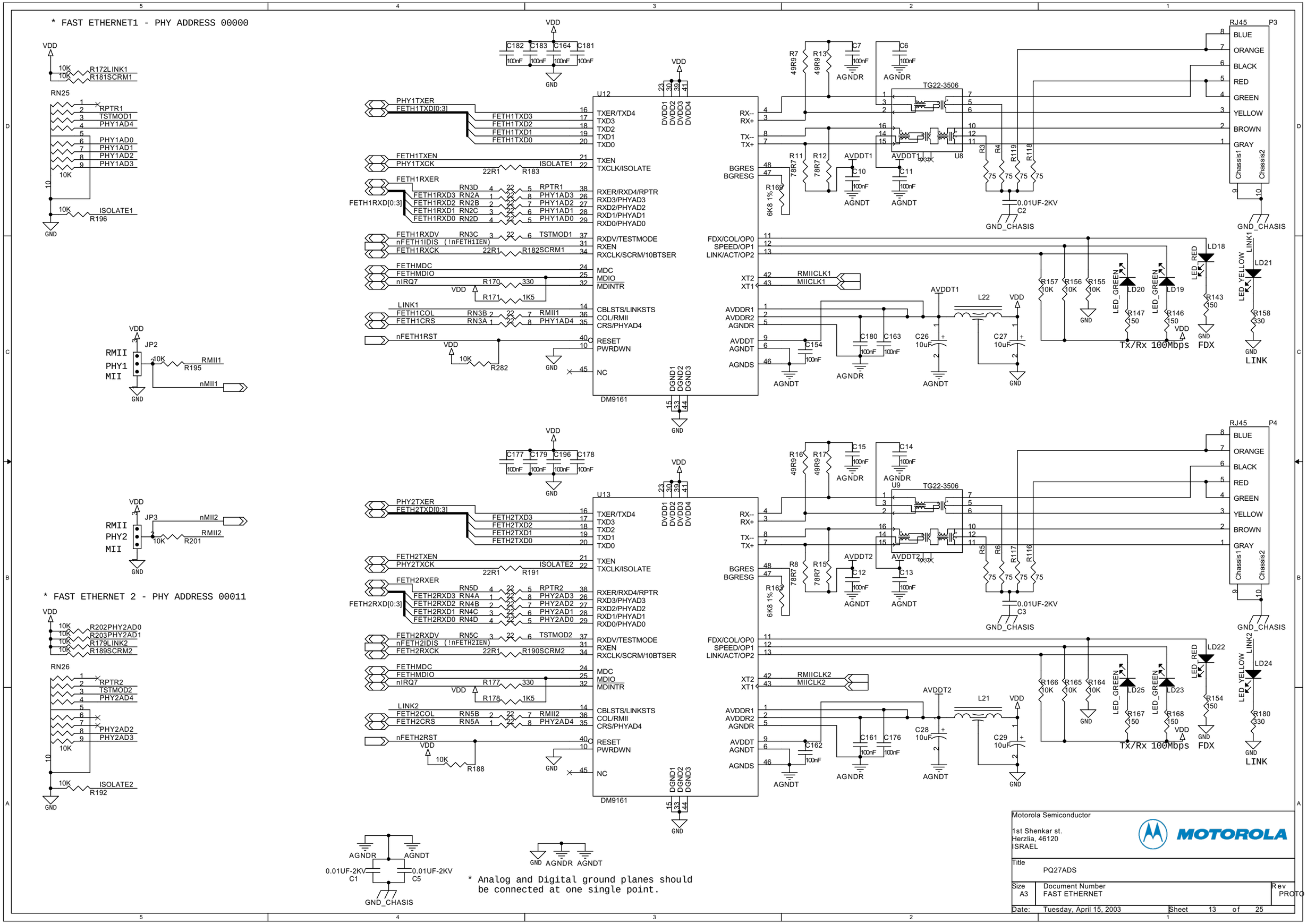
* FAST ETHERNET1 - PHY ADDRESS 00000
* FAST ETHERNET 2 - PHY ADDRESS 00011
U12
U13
DM9161
U8
U9
TG22-3506
RJ45 P3
RJ45 P4
TX/Rx 100Mbps
FDX
LINK
* Analog and Digital ground planes should be connected at one single point.
Motorola Semiconductor
1st Shenkar st.
Herzlia, 46120
ISRAEL
MOTOROLA
Title
PQ27ADS
Size A3
Document Number
FAST ETHERNET
Rev PROTO
Date: Tuesday, April 15, 2003
Sheet 13 of 25

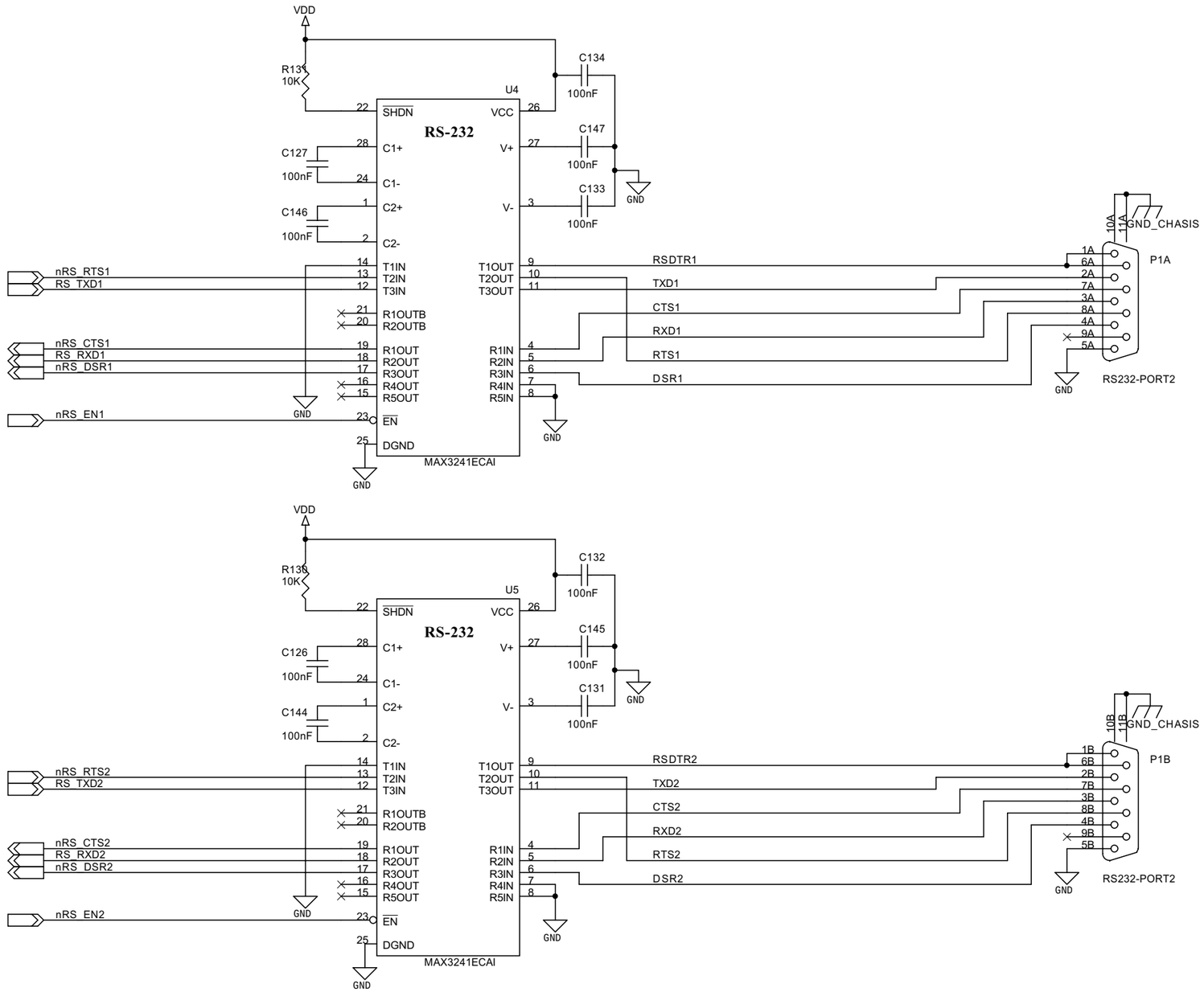

Motorola Semiconductor

1st Shenkar st.
Herzlia, 46120
ISRAEL

MOTOROLA

Title
PQ27ADS

Size	Document Number	Rev
A3	RS232	PROTO

Date: Tuesday, April 15, 2003 Sheet 14 of 25

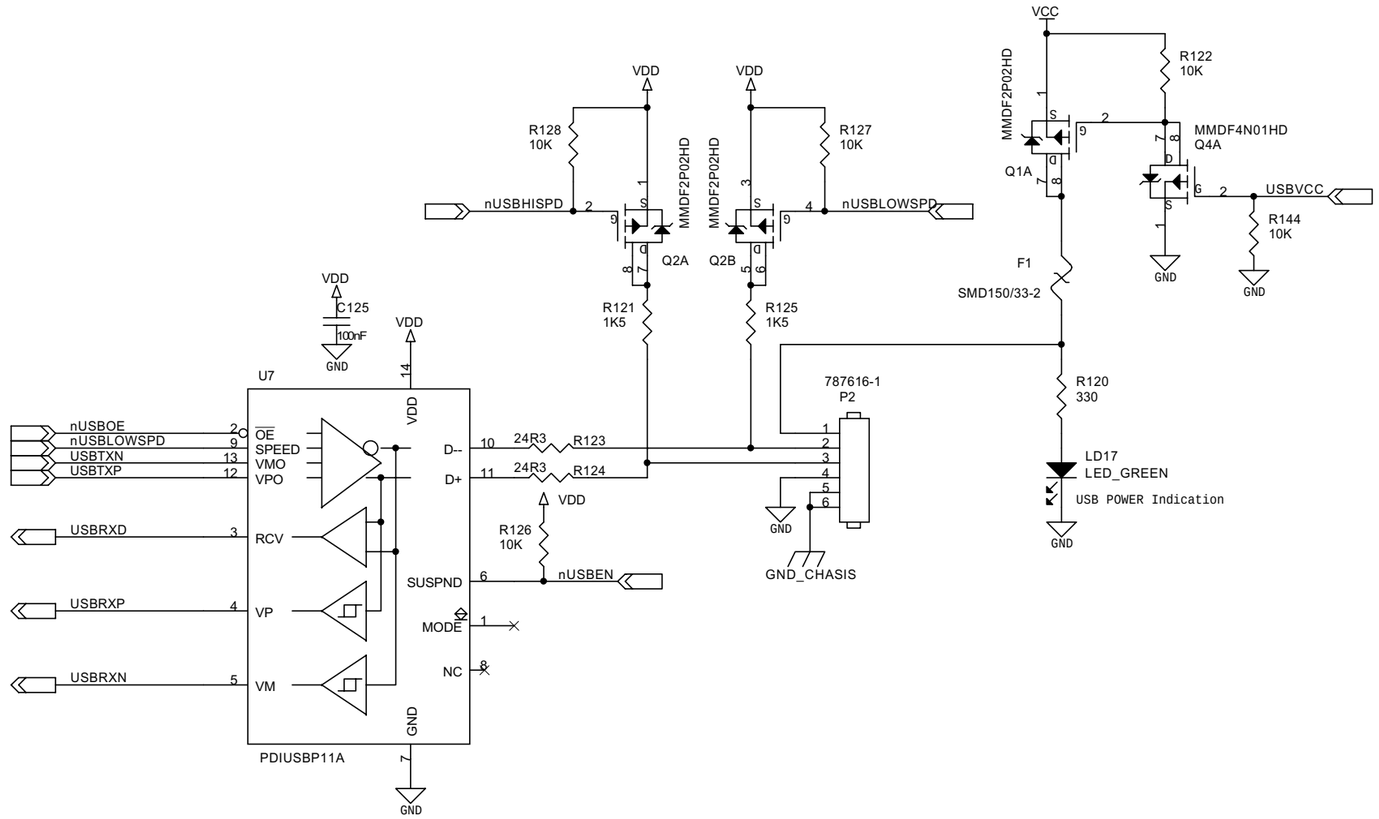

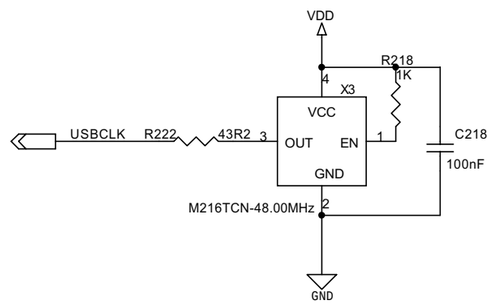

Motorola Semiconductor

1st Shenkar st.
Herzlia, 46120
ISRAEL

MOTOROLA

Title	PQ27ADS	
Size A3	Document Number USB	Rev PROTO
Date: Tuesday, April 15, 2003	Sheet 15 of 25	

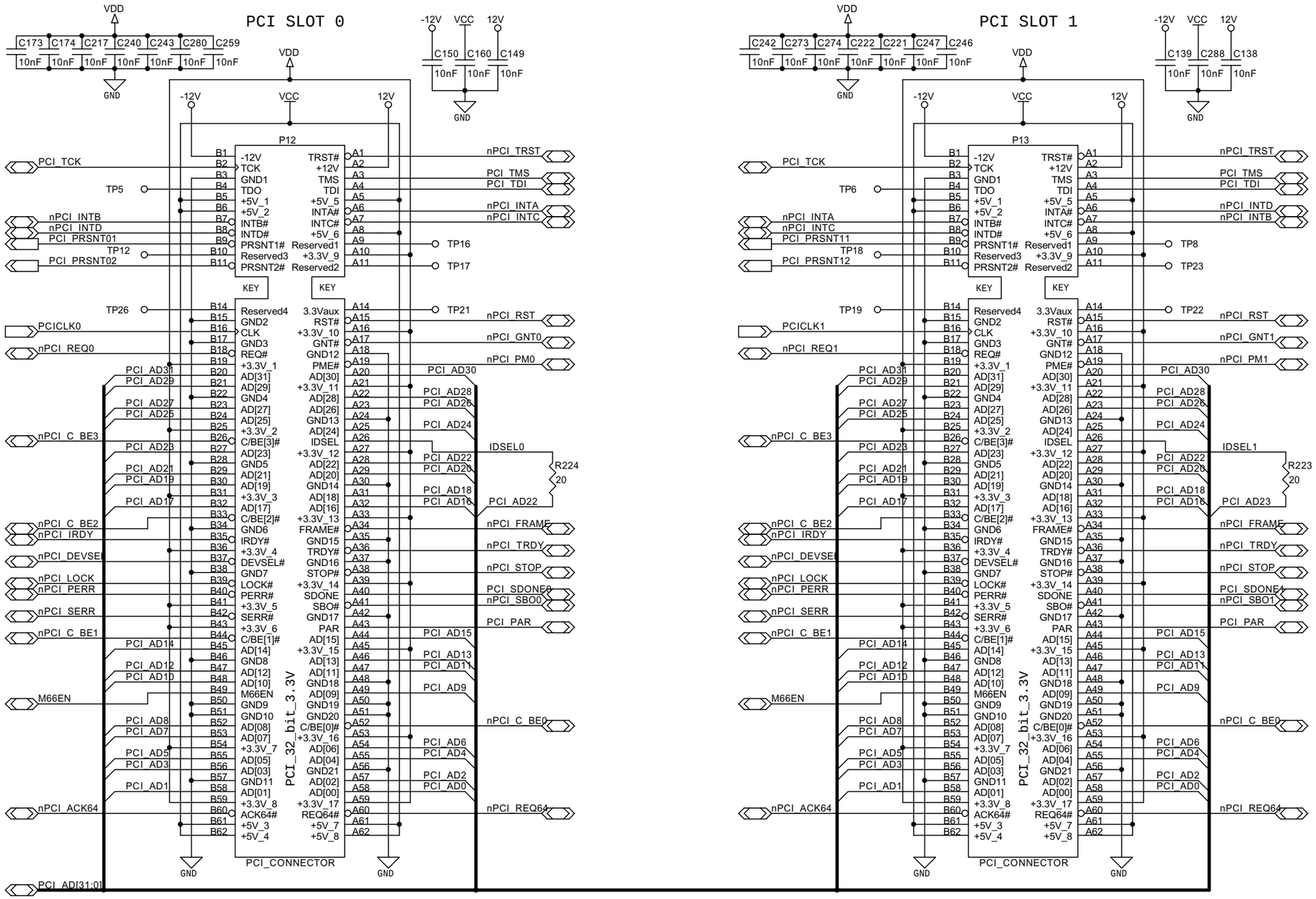

Motorola Semiconductor
1st Shenkar st.
Herzlia, 46120
ISRAEL

MOTOROLA

Title
PQ27ADS

Size	Document Number	Rev
A3	PCI CONNECTORS - 1	PROTO

Date: Tuesday, April 15, 2003 Sheet 16 of 25

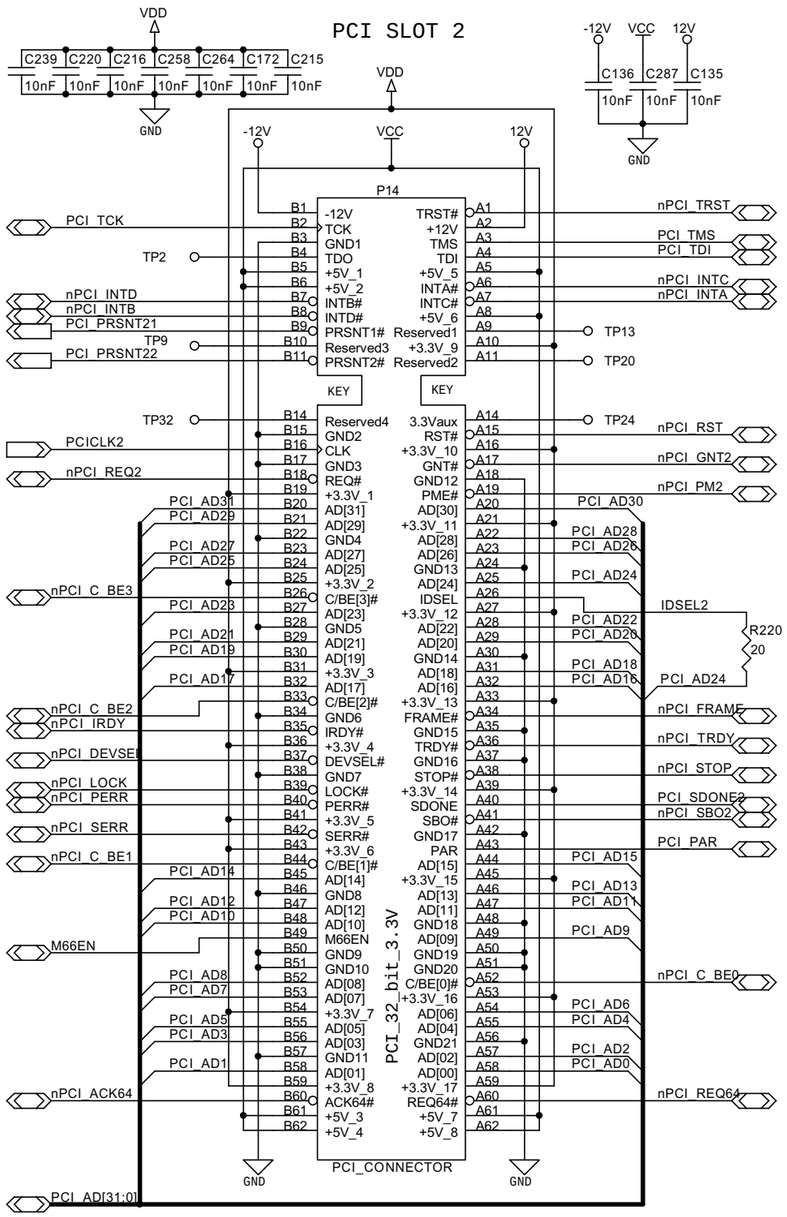

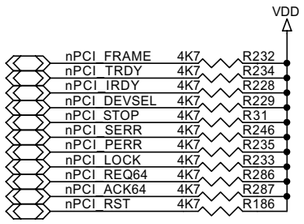

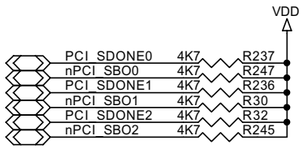

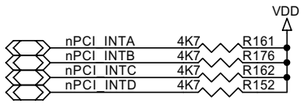

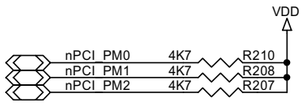

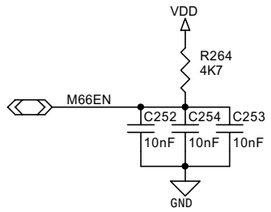

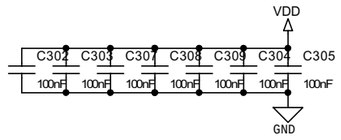

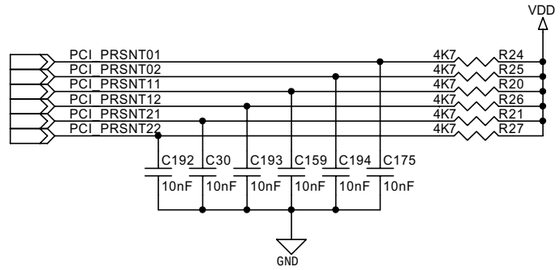

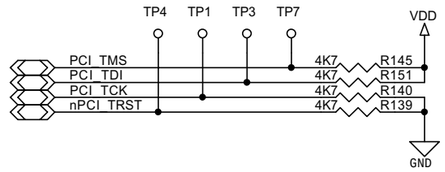

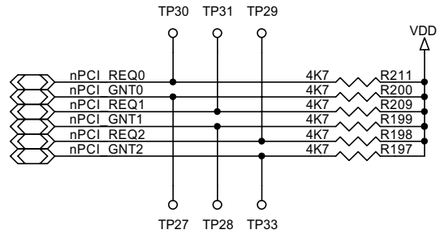

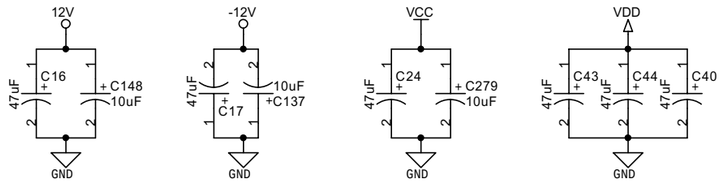

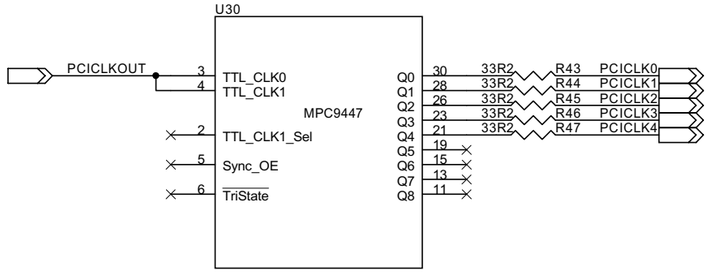

Motorola Semiconductor
1st Shenkar st.
Herzlia, 46120
ISRAEL

MOTOROLA

Title: PQ27ADS

Size	Document Number	Rev
A3	PCI CONNECTORS - 2	PROTO

Date: Tuesday, April 15, 2003 Sheet 17 of 25

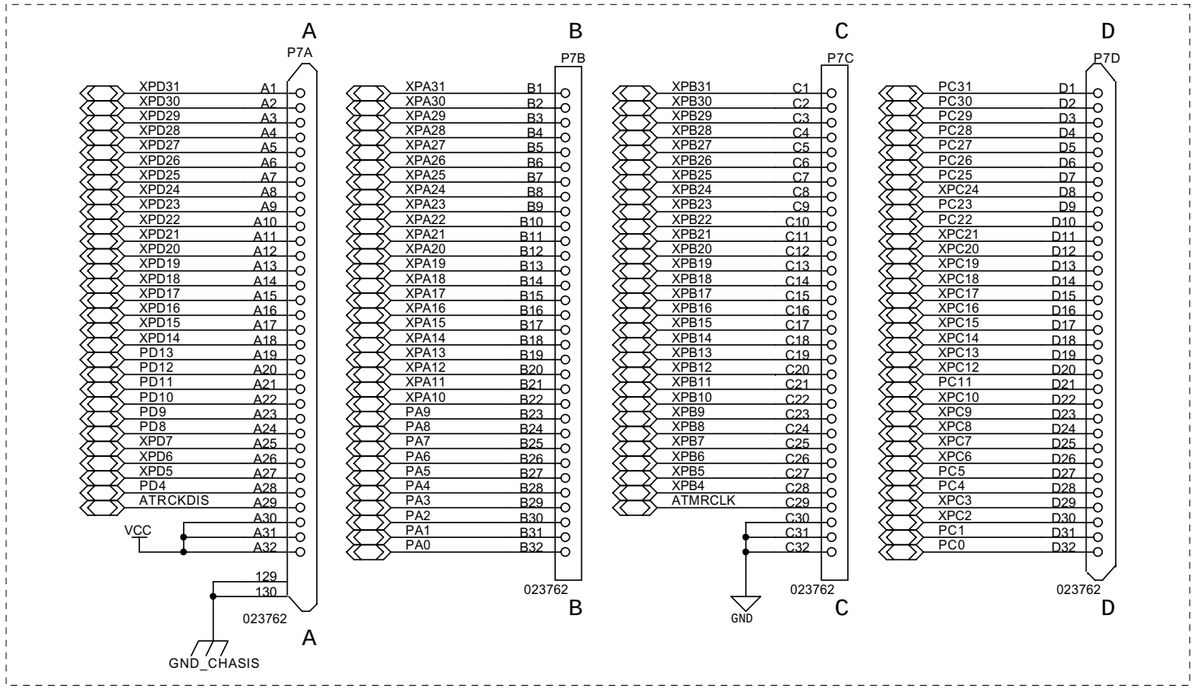

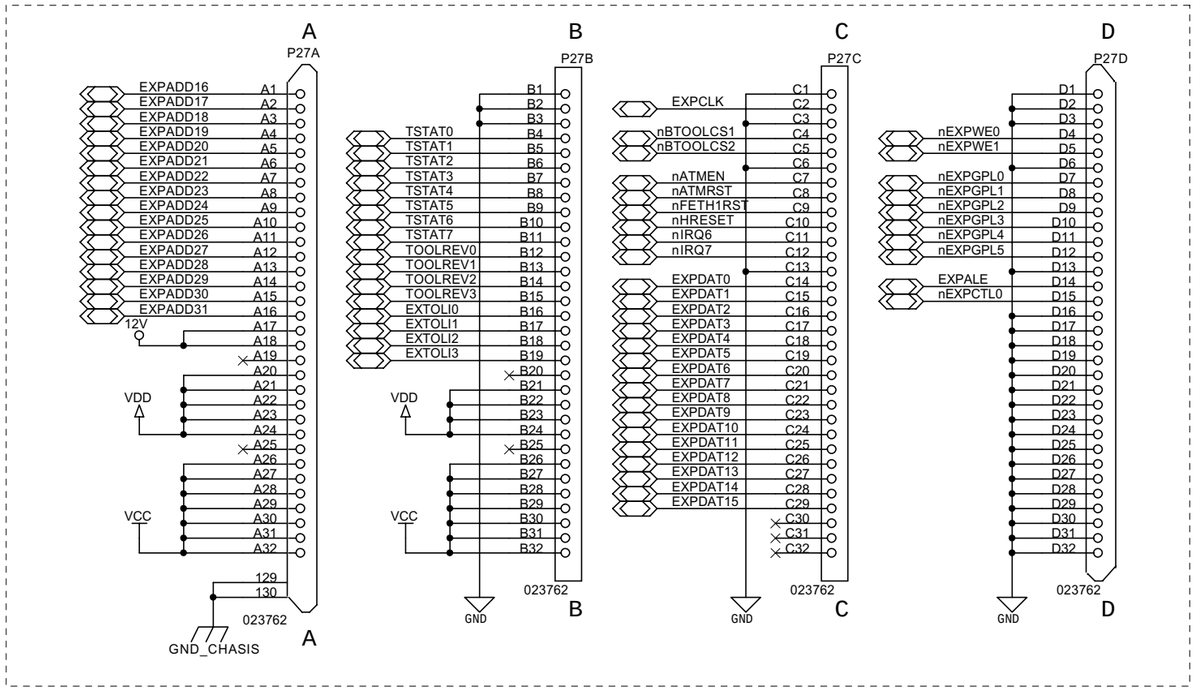

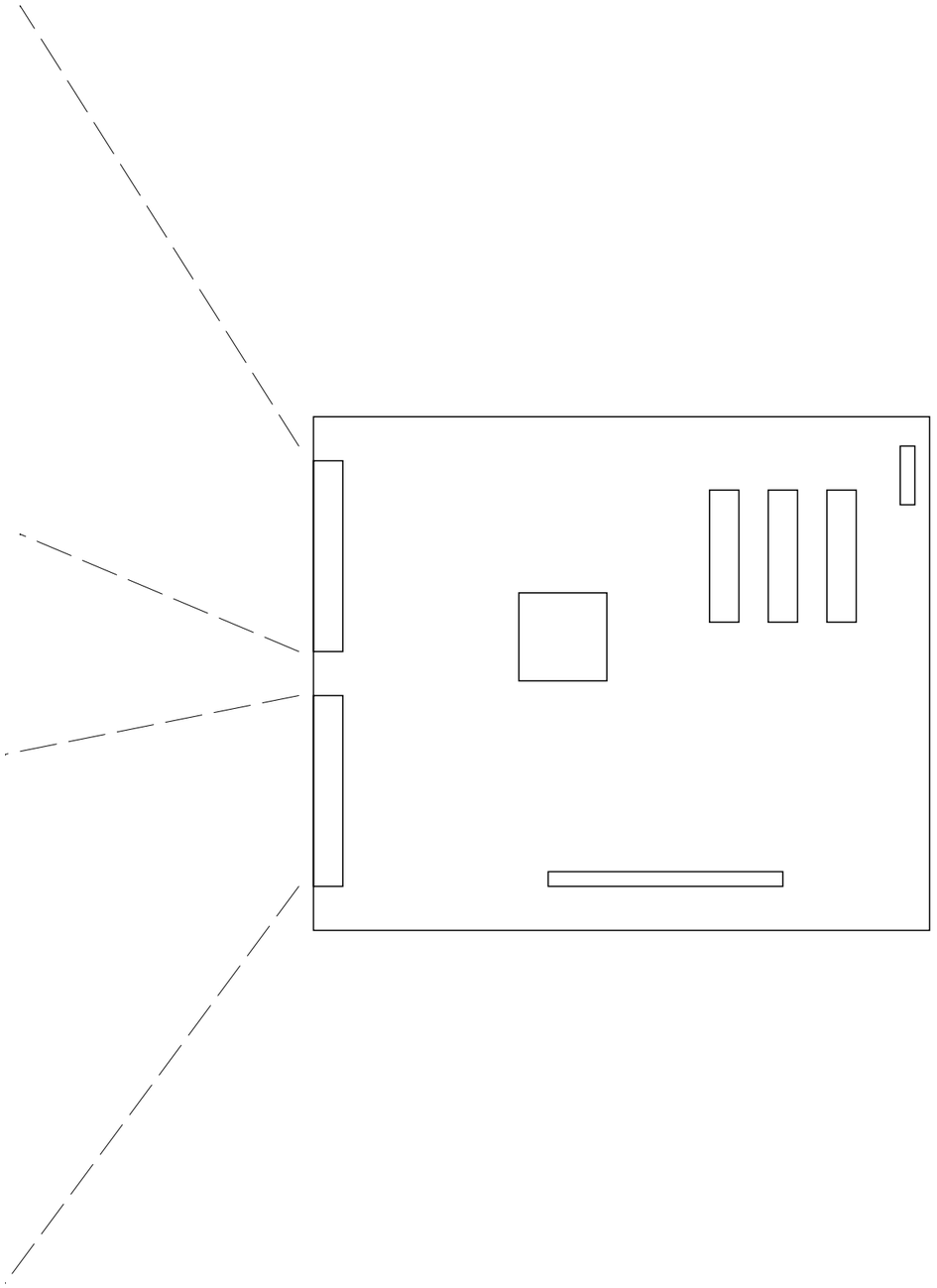

Motorola Semiconductor

1st Shenkar st.
Herzlia, 46120
ISRAEL

MOTOROLA

Title	PQ27ADS	
Size A3	Document Number EXPANSION CONNECTORS	Rev PROTO
Date: Tuesday, April 15, 2003	Sheet 18 of 25	

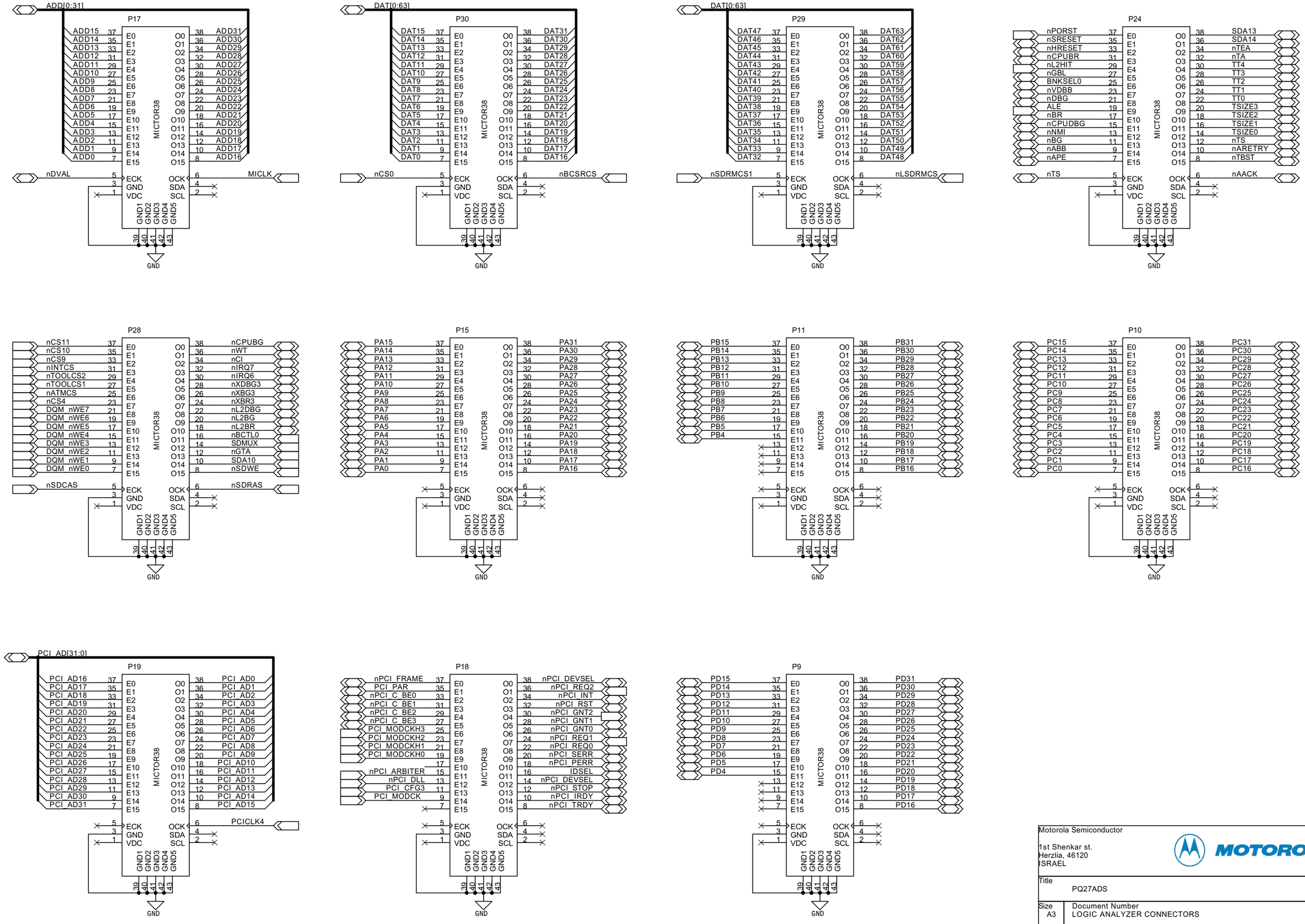

Motorola Semiconductor

1st Shenkar st.
Herzlia, 46120
ISRAEL

MOTOROLA

Title
PQ27ADS

Size	Document Number	Rev
A3	LOGIC ANALYZER CONNECTORS	

Date: Tuesday, April 15, 2003 Sheet 19 of 25

3.3V PULL-UPS

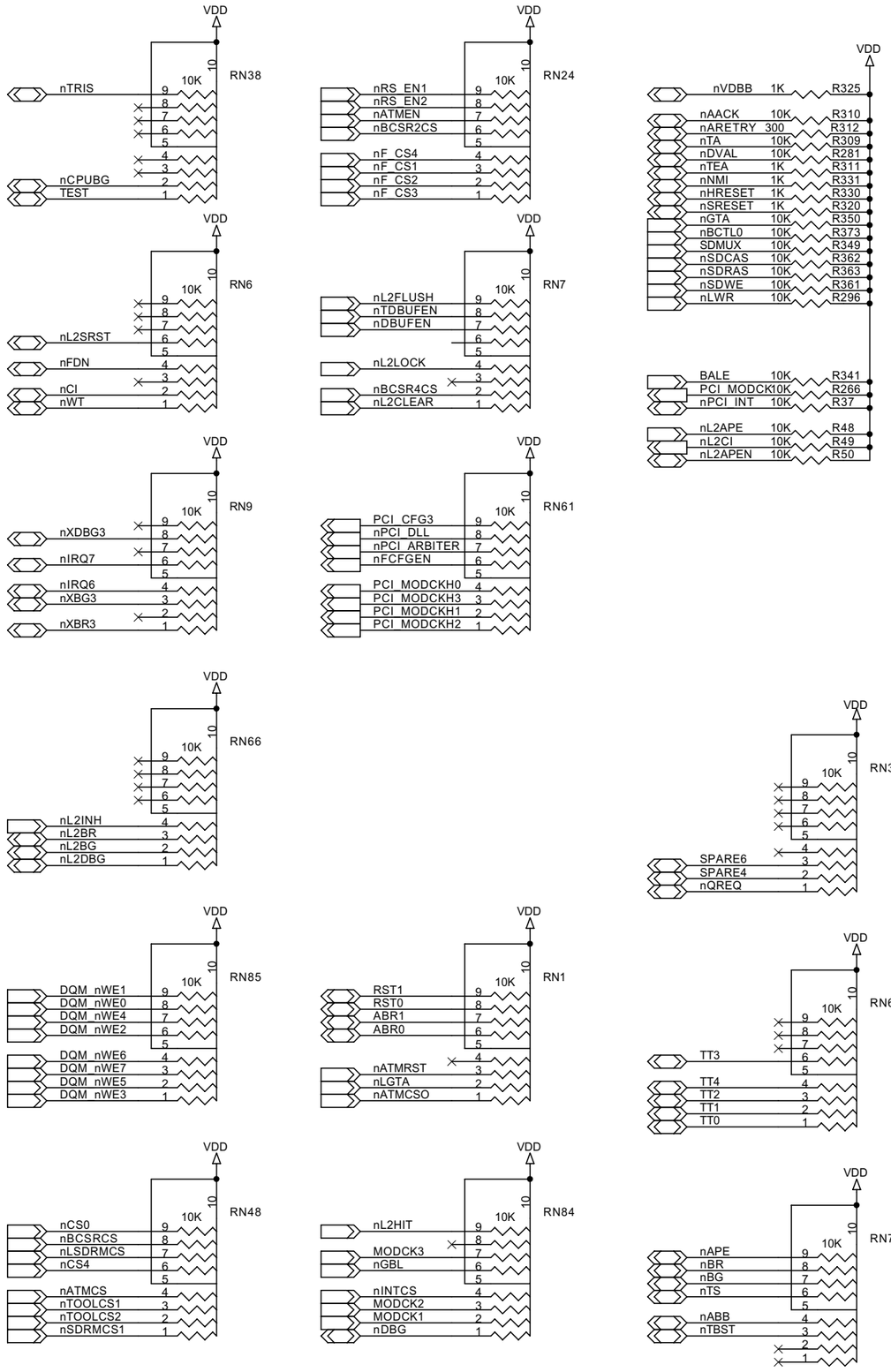

5V PULL-UPS

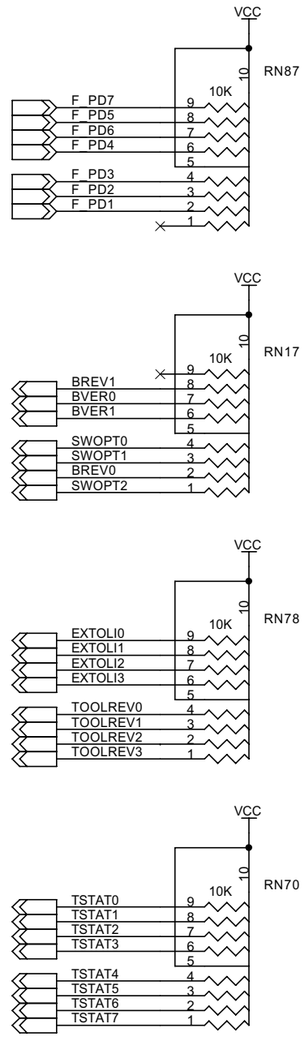

PULL-DOWNS

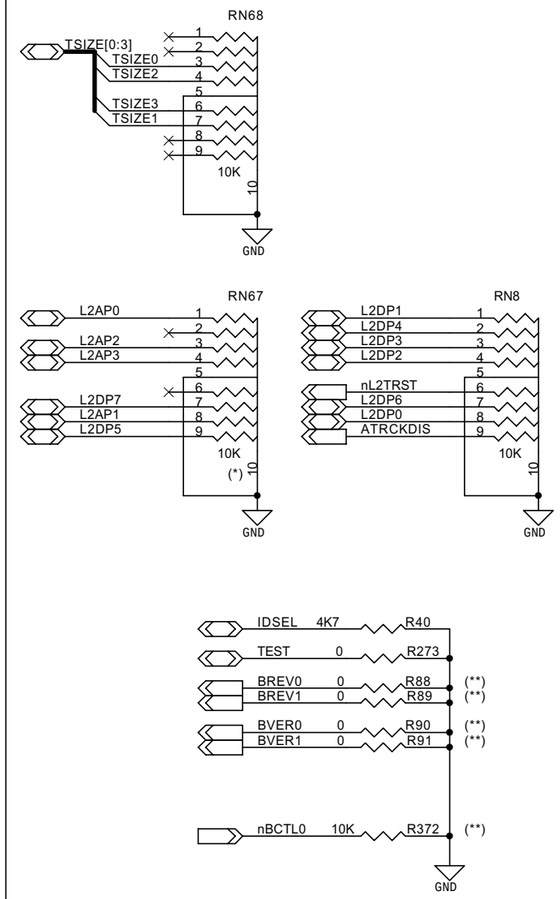

(*) R210 Was changed to 300 ohm per device errata

* RN67 is assembled if cache is used.

** R88 & R89 determine the boards' revision as follows:

R88	R89	Revision
yes	yes	ENG
no	yes	PILOT
yes	no	A
no	no	Reserved

** R372 depends on the functionality of nBCTL0 signal - not assembled in the factory.

Motorola Semiconductor
1st Shenkar st.
Herzlia, 46120
ISRAEL

MOTOROLA

Title: PQ27ADS

Size: A3 | Document Number: PULL UPS/DOWNS | Rev: PROTO

Date: Tuesday, April 15, 2003 | Sheet 20 of 25

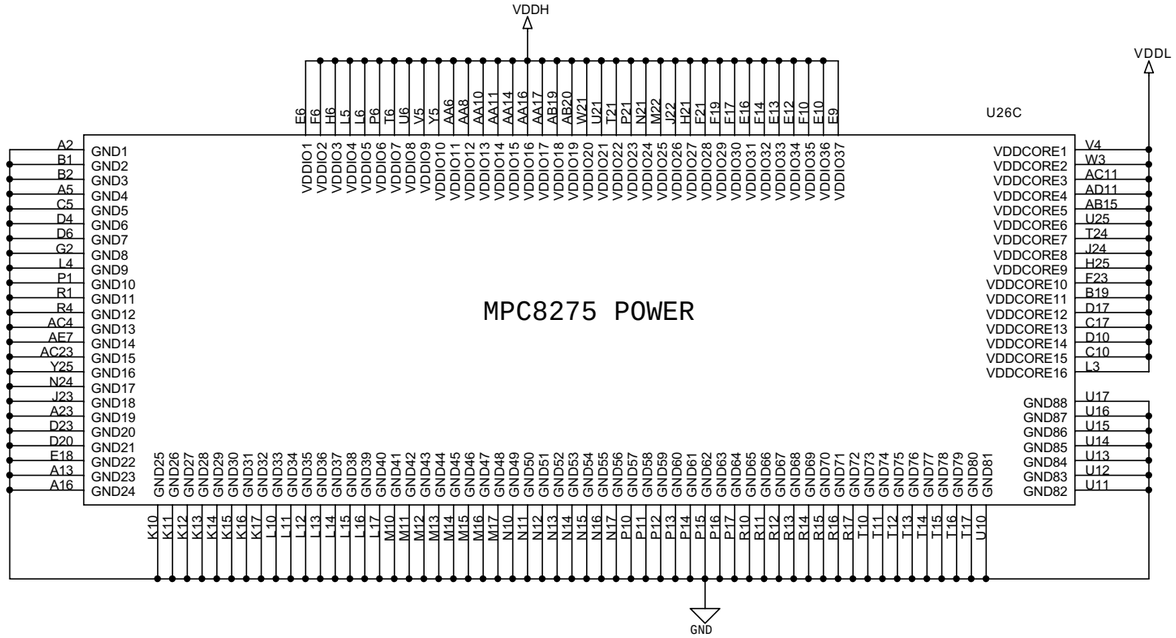

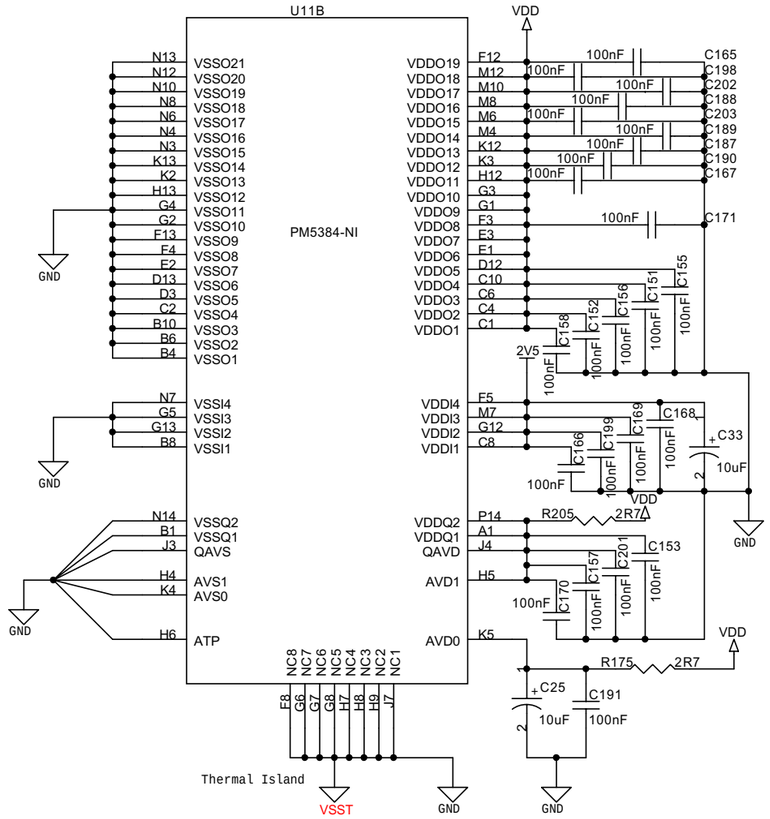

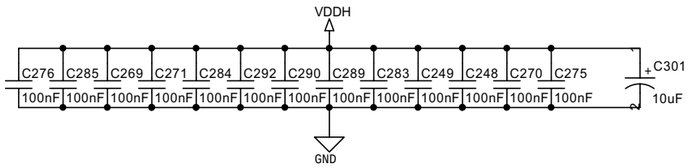

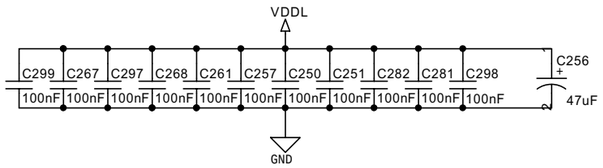

Motorola Semiconductor

1st Shenkar st.
Herzlia, 46120
ISRAEL

MOTOROLA

Title
PQ27ADS

Size	Document Number	Rev
A3	MPC8275 & ATM PHY POWER	PROTO

Date: Tuesday, April 15, 2003 Sheet 21 of 25

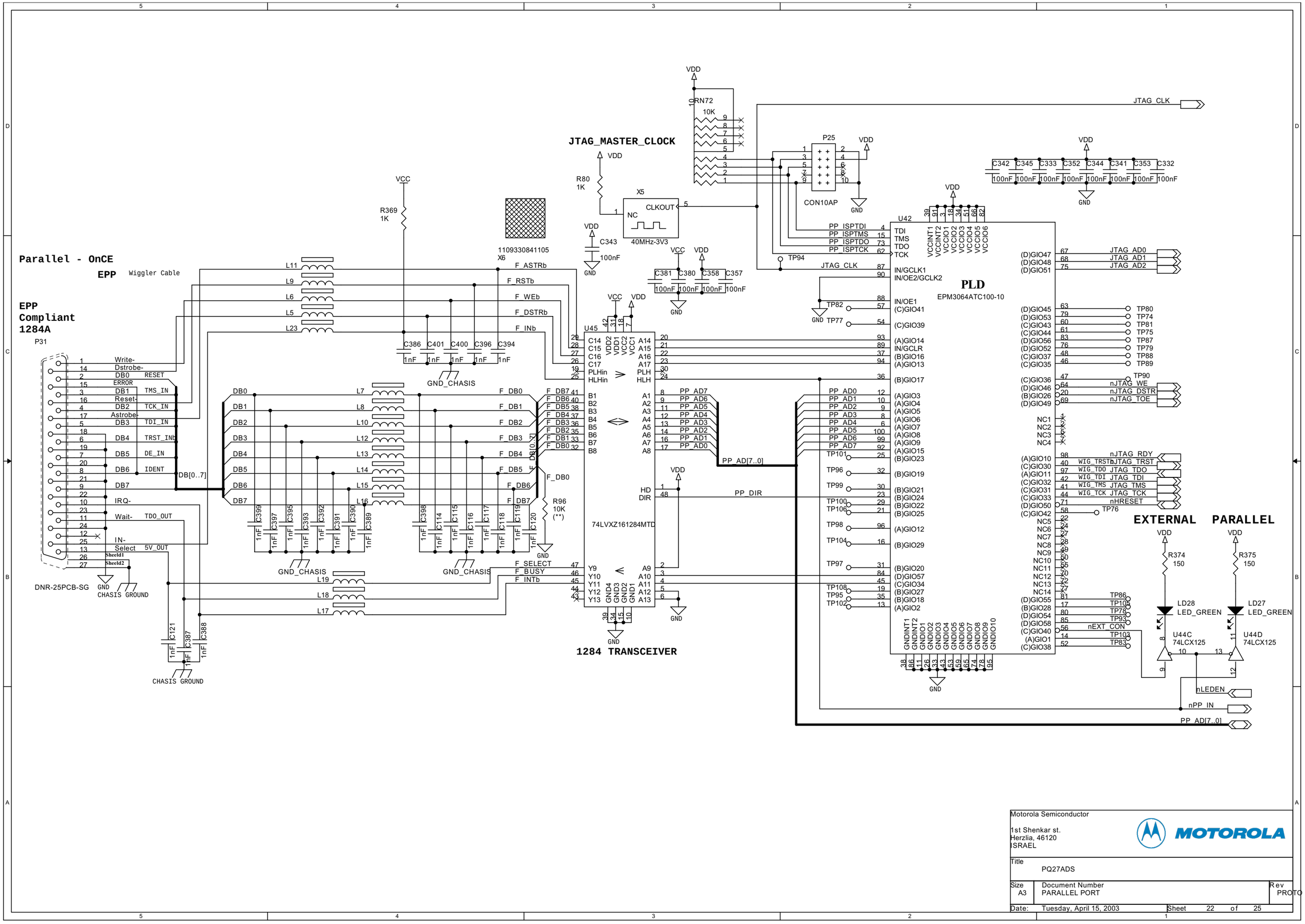

Motorola Semiconductor
1st Shenkar st.
Herzlia, 46120
ISRAEL

Title: PQ27ADS

Size	Document Number	Rev
A3	PARALLEL PORT	PROTO

Date: Tuesday, April 15, 2003 Sheet 22 of 25

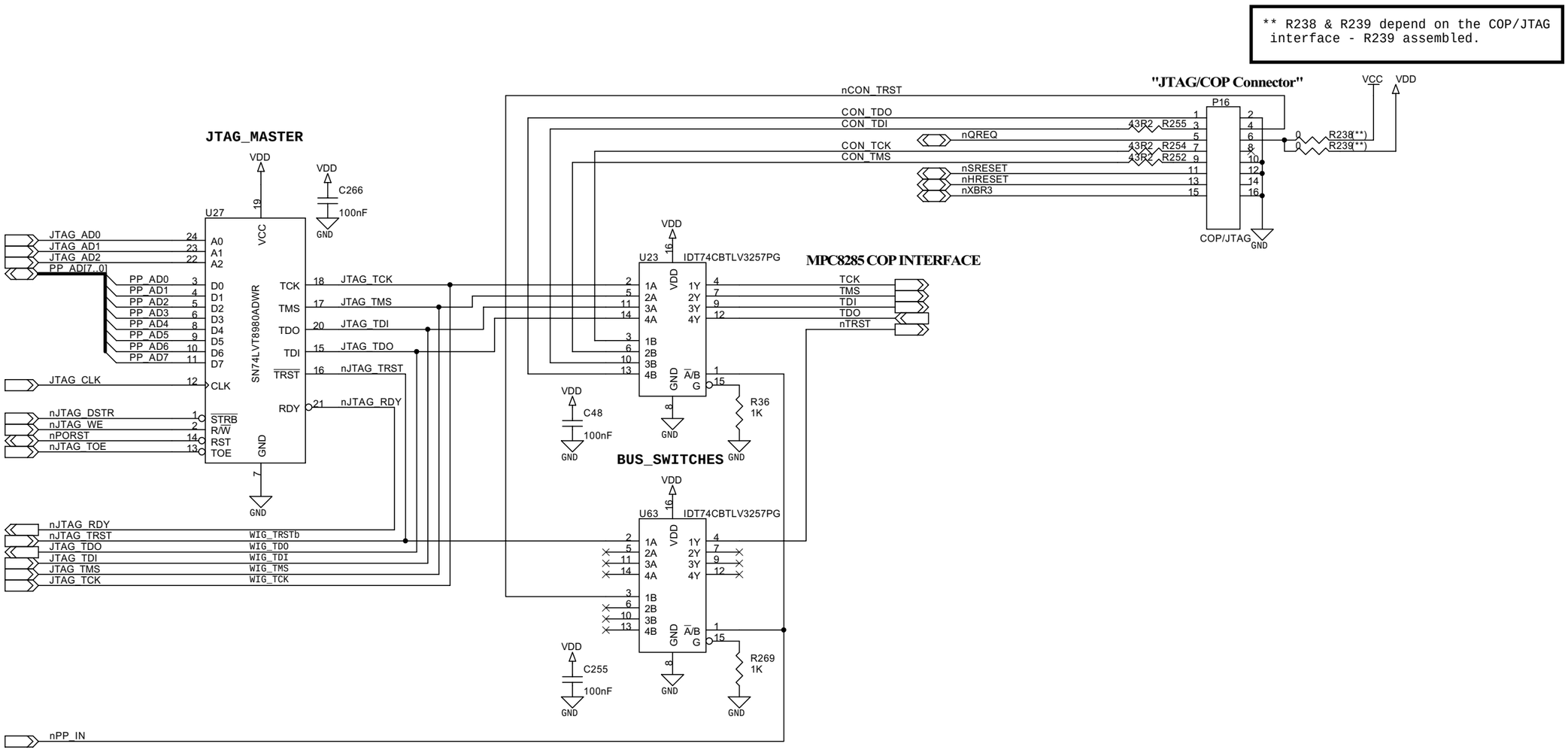

Motorola Semiconductor

1st Shenkar st.
Herzlia, 46120
ISRAEL

MOTOROLA

Title
PQ27ADS

Size	Document Number	Rev
A3	COP/JTAG COMMAND CONVERTER	PROTO

Date: Tuesday, April 15, 2003 Sheet 23 of 25

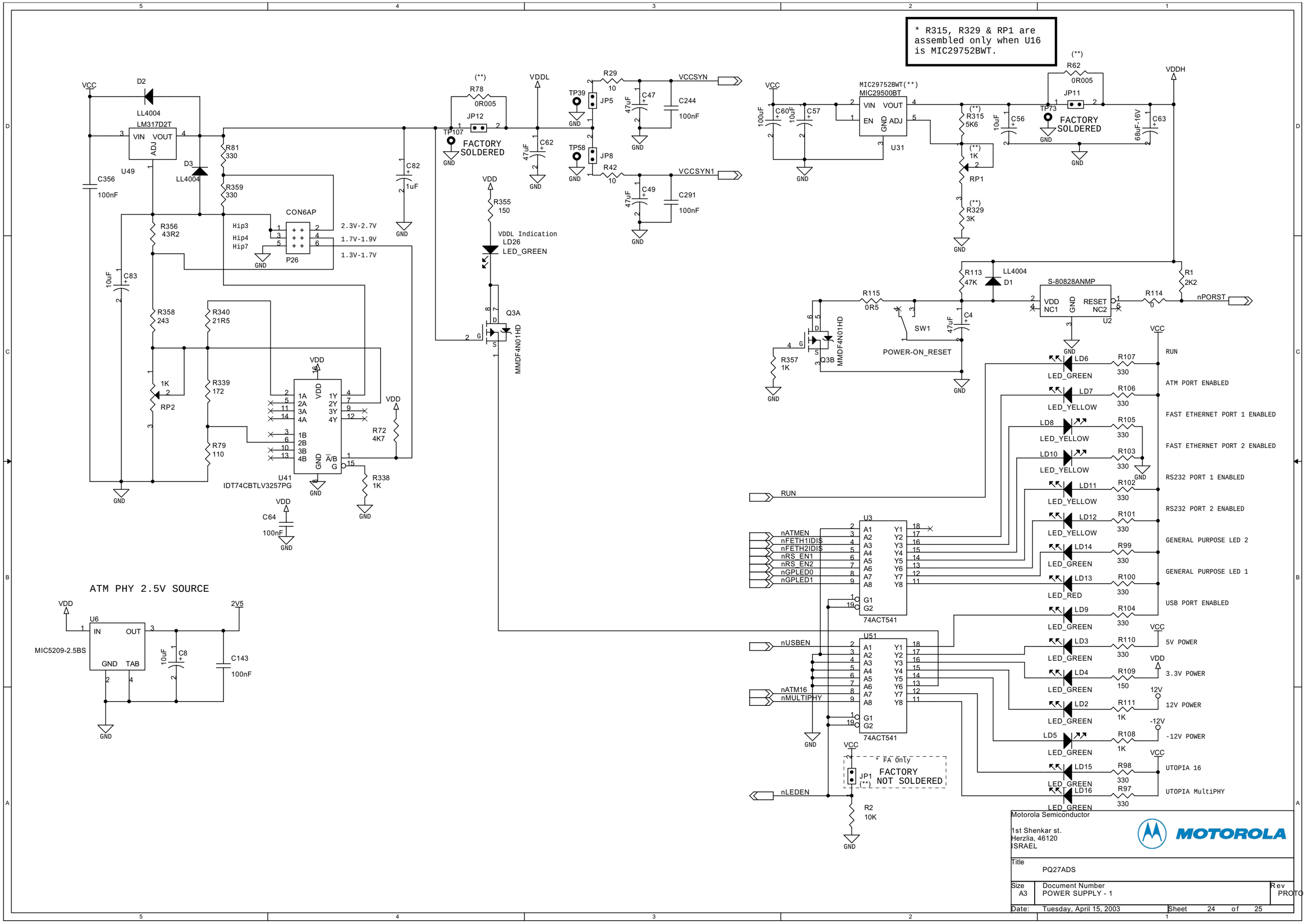
* R315, R329 & RP1 are assembled only when U16 is MIC29752BWT.
VCC
D2
LL4004
LM317D2T
VIN VOUT
ADJ
U49
C356
100nF
D3
LL4004
R81
330
R359
330
R356
43R2
Hip3
Hip4
Hip7
CON6AP
P26
2.3V-2.7V
1.7V-1.9V
1.3V-1.7V
C83
10uF
R358
243
R340
21R5
1K
RP2
R339
172
R79
110
VDD
1A 2A 3A 4A
1B 2B 3B 4B
1Y 2Y 3Y 4Y
GND A/B G
U41
IDT74CBTLV3257PG
R72
4K7
R338
1K
C64
100nF
C82
1uF
(**)
R78
0R005
JP12
TP107
FACTORY SOLDERED
VDDL
C62
47uF
TP39
JP5
TP58
JP8
R29
10
R42
10
C47
47uF
C49
47uF
C244
100nF
C291
100nF
VCCSYN
VCCSYN1
VDD
R355
150
VDDL Indication
LD26
LED_GREEN
Q3A
MMDF4N01HD
MIC29752BWT(**)
MIC29500BT
VIN VOUT
EN GND ADJ
U31
C60
100uF
C57
10uF
R315
5K6
1K
RP1
R329
3K
C56
10uF
R62
0R005
JP11
TP73
FACTORY SOLDERED
C63
68uF-16V
VDDH
R113
47K
LL4004
D1
R115
0R5
SW1
POWER-ON_RESET
C4
47uF
S-80828ANMP
VDD NC1 GND RESET NC2
U2
R114
0
R1
2K2
nPORST
R357
1K
Q3B
MMDF4N01HD
RUN
LD6 LED_GREEN R107 330 RUN
LD7 LED_YELLOW R106 330 ATM PORT ENABLED
LD8 LED_YELLOW R105 330 FAST ETHERNET PORT 1 ENABLED
LD10 LED_YELLOW R103 330 FAST ETHERNET PORT 2 ENABLED
LD11 LED_YELLOW R102 330 RS232 PORT 1 ENABLED
LD12 LED_YELLOW R101 330 RS232 PORT 2 ENABLED
LD14 LED_GREEN R99 330 GENERAL PURPOSE LED 2
LD13 LED_RED R100 330 GENERAL PURPOSE LED 1
LD9 LED_GREEN R104 330 USB PORT ENABLED
LD3 LED_GREEN R110 330 5V POWER
LD4 LED_GREEN R109 150 3.3V POWER
LD2 LED_GREEN R111 1K 12V POWER
LD5 LED_GREEN R108 1K -12V POWER
LD15 LED_GREEN R98 330 UTOPIA 16
LD16 LED_GREEN R97 330 UTOPIA MultiPHY
U3
nATMEN
nFETH1IDIS
nFETH2IDIS
nRS_EN1
nRS_EN2
nGPLED0
nGPLED1
74ACT541
U51
nUSBEN
nATM16
nMULTIPHY
74ACT541
nLEDEN
R2
10K
* FA Only
JP1
FACTORY NOT SOLDERED
ATM PHY 2.5V SOURCE
U6
IN OUT
GND TAB
MIC5209-2.5BS
2V5
C8
10uF
C143
100nF
Motorola Semiconductor
1st Shenkar st.
Herzlia, 46120
ISRAEL
MOTOROLA
Title
PQ27ADS
Size A3
Document Number
POWER SUPPLY - 1
Rev
PROTO
Date: Tuesday, April 15, 2003
Sheet 24 of 25

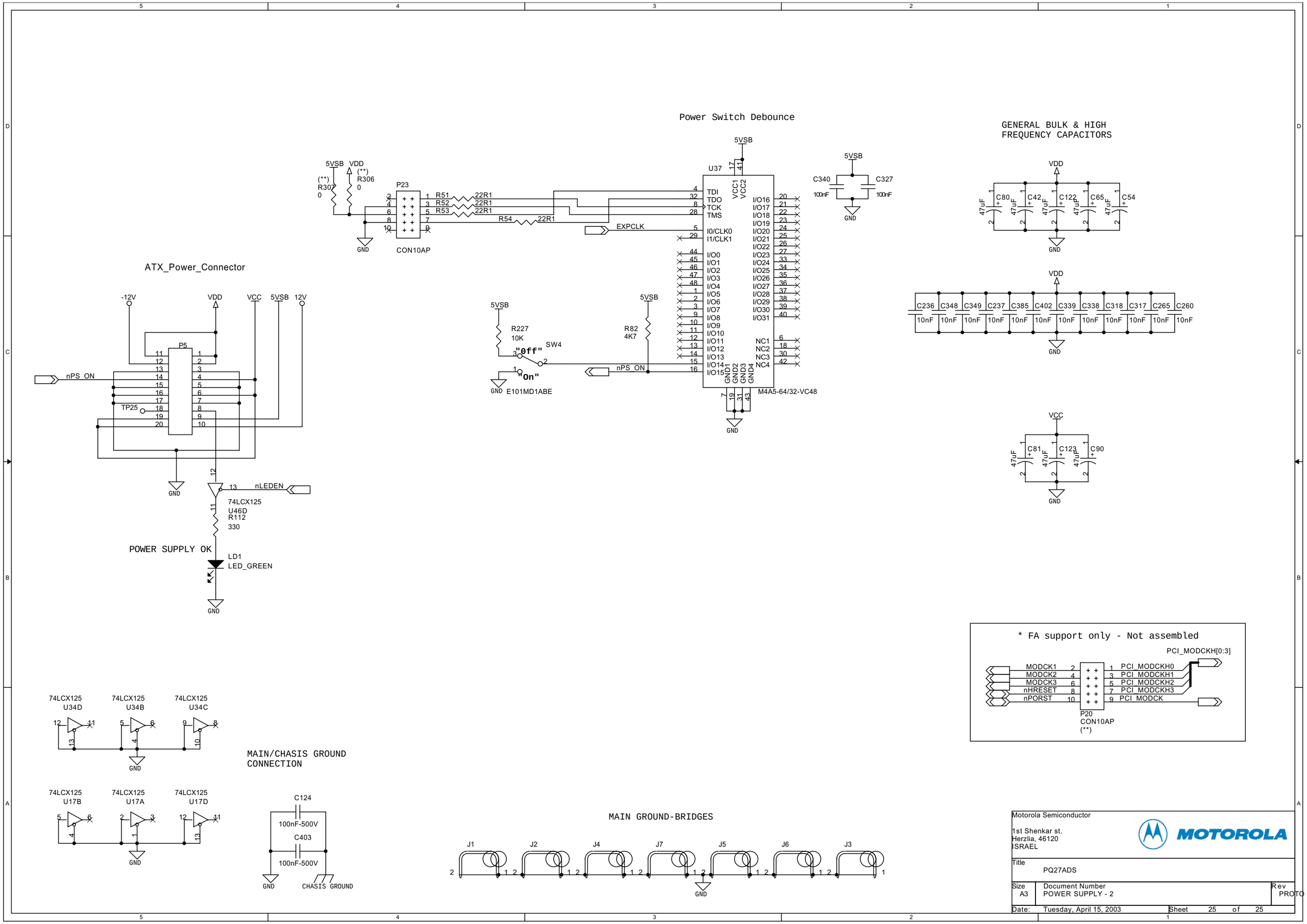
Power Switch Debounce
GENERAL BULK & HIGH FREQUENCY CAPACITORS
ATX_Power_Connector
-12V
VDD
VCC
5VSB
12V
P5
nPS_ON
TP25
GND
nLEDEN
74LCX125
U46D
R112
330
POWER SUPPLY OK
LD1
LED_GREEN
5VSB
VDD
(**)
R307
0
R306
0
P23
CON10AP
R51
R52
R53
R54
22R1
EXPCLK
U37
TDI
TDO
TCK
TMS
I0/CLK0
I1/CLK1
I/O0
I/O1
I/O2
I/O3
I/O4
I/O5
I/O6
I/O7
I/O8
I/O9
I/O10
I/O11
I/O12
I/O13
I/O14
I/O15
I/O16
I/O17
I/O18
I/O19
I/O20
I/O21
I/O22
I/O23
I/O24
I/O25
I/O26
I/O27
I/O28
I/O29
I/O30
I/O31
NC1
NC2
NC3
NC4
VCC1
VCC2
GND1
GND2
GND3
GND4
M4A5-64/32-VC48
R227
10K
SW4
"off"
"On"
E101MD1ABE
R82
4K7
C340
C327
100nF
C80
C42
C122
C65
C54
47uF
C236
C348
C349
C237
C385
C402
C339
C338
C318
C317
C265
C260
10nF
C81
C123
C90
* FA support only - Not assembled
PCI_MODCKH[0:3]
MODCK1
MODCK2
MODCK3
nHRESET
nPORST
PCI_MODCKH0
PCI_MODCKH1
PCI_MODCKH2
PCI_MODCKH3
PCI_MODCK
P20
CON10AP
(**)
74LCX125
U34D
U34B
U34C
U17B
U17A
U17D
MAIN/CHASIS GROUND CONNECTION
C124
100nF-500V
C403
CHASIS GROUND
MAIN GROUND-BRIDGES
J1
J2
J4
J7
J5
J6
J3
Motorola Semiconductor
1st Shenkar st.
Herzlia, 46120
ISRAEL
MOTOROLA
Title
PQ27ADS
Size
A3
Document Number
POWER SUPPLY - 2
Rev
PROTO
Date:
Tuesday, April 15, 2003
Sheet 25 of 25