NXP MCU IN ELECTRICITY CONVERTER AND STORAGE (ECS)

Danson.Li

JUNE 2022

SECURE CONNECTIONS
FOR A SMARTER WORLD

PUBLIC

AGENDA

- ECS General Introduction
- NXP Solutions
- NXP MCU introduction
- Development tools

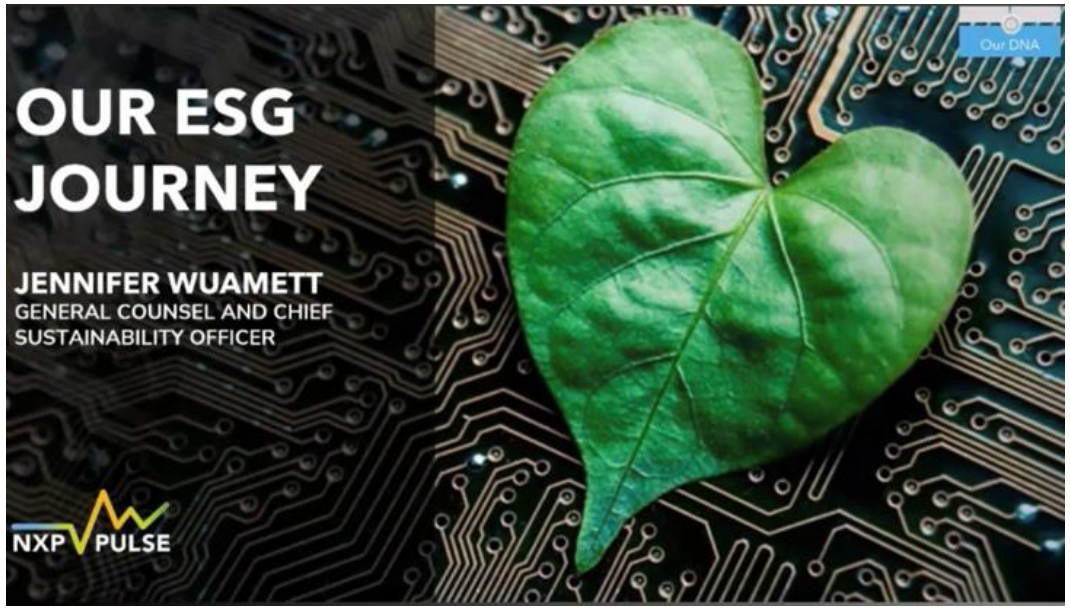

Electricity Generation，发电
传统能源，风光核水气

Electricity Distribution，输变电
超高压直流传输，断路器

Energy Conversion and Storage，转换与存储
交直交变换，EV charging

Power and Energy Meters，计量表计
power meter, heat meter, wireless/PLC

Sustainable，ESG

ECS GENERAL TYPES

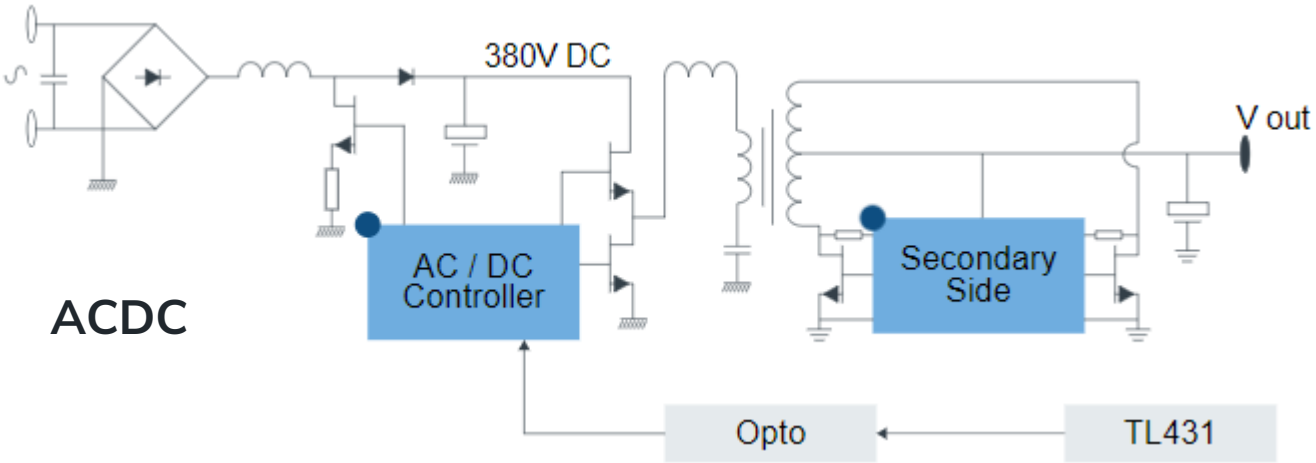

ACDC

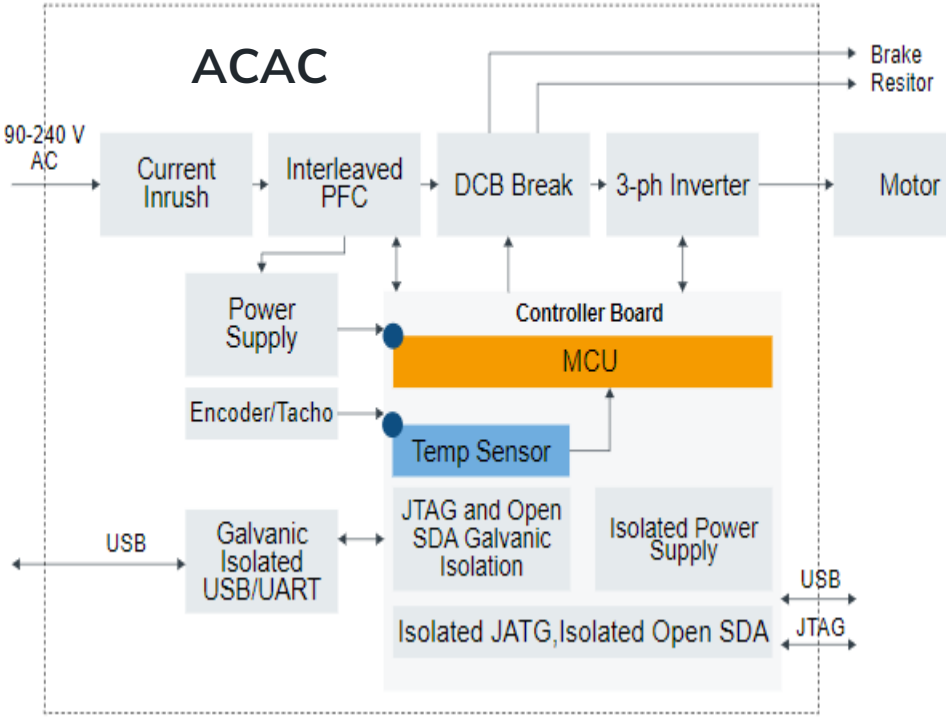

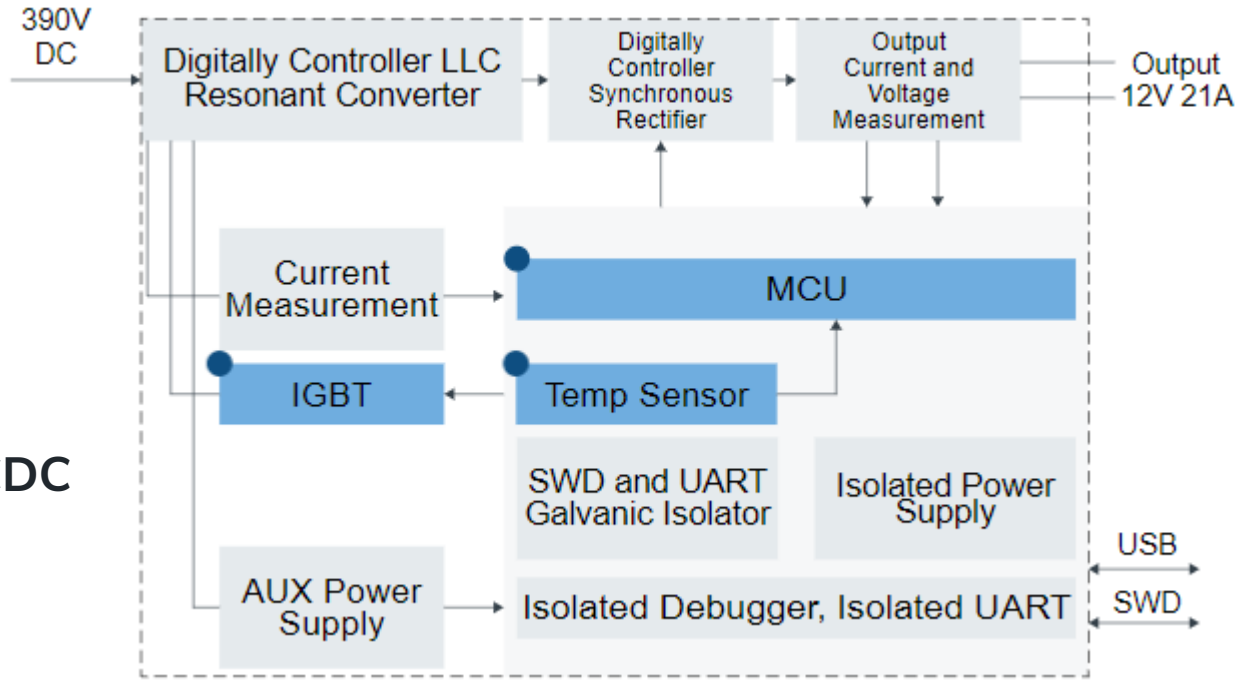

DCDC

DCAC采用带负载电流前馈控制技术，输出电压、电感电流瞬时值双闭环控制的单相半桥逆变器

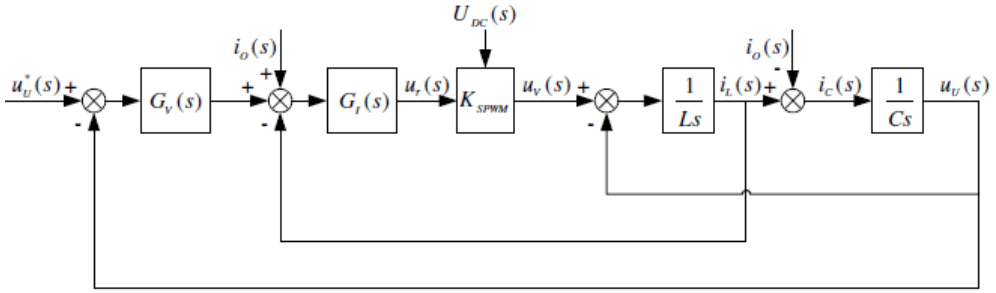

NXP，PFC SOLUTION

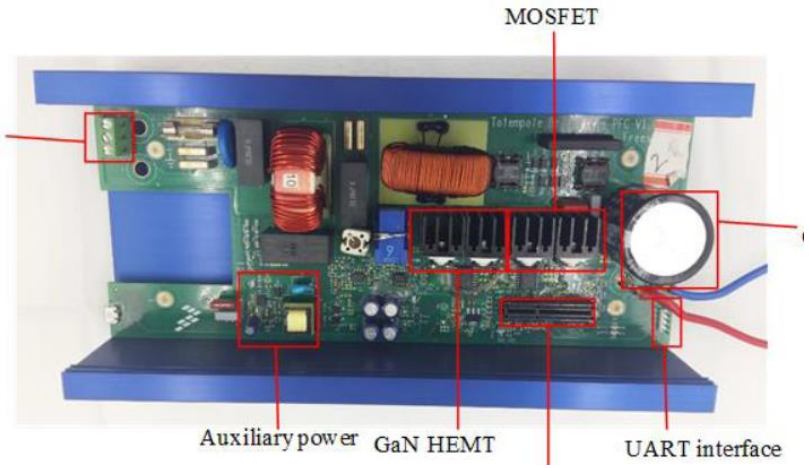

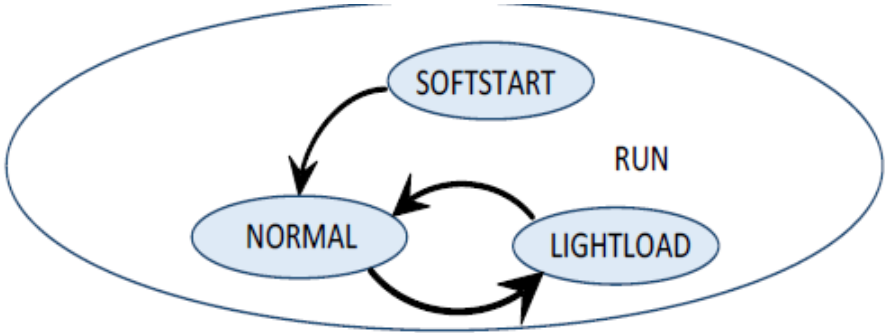

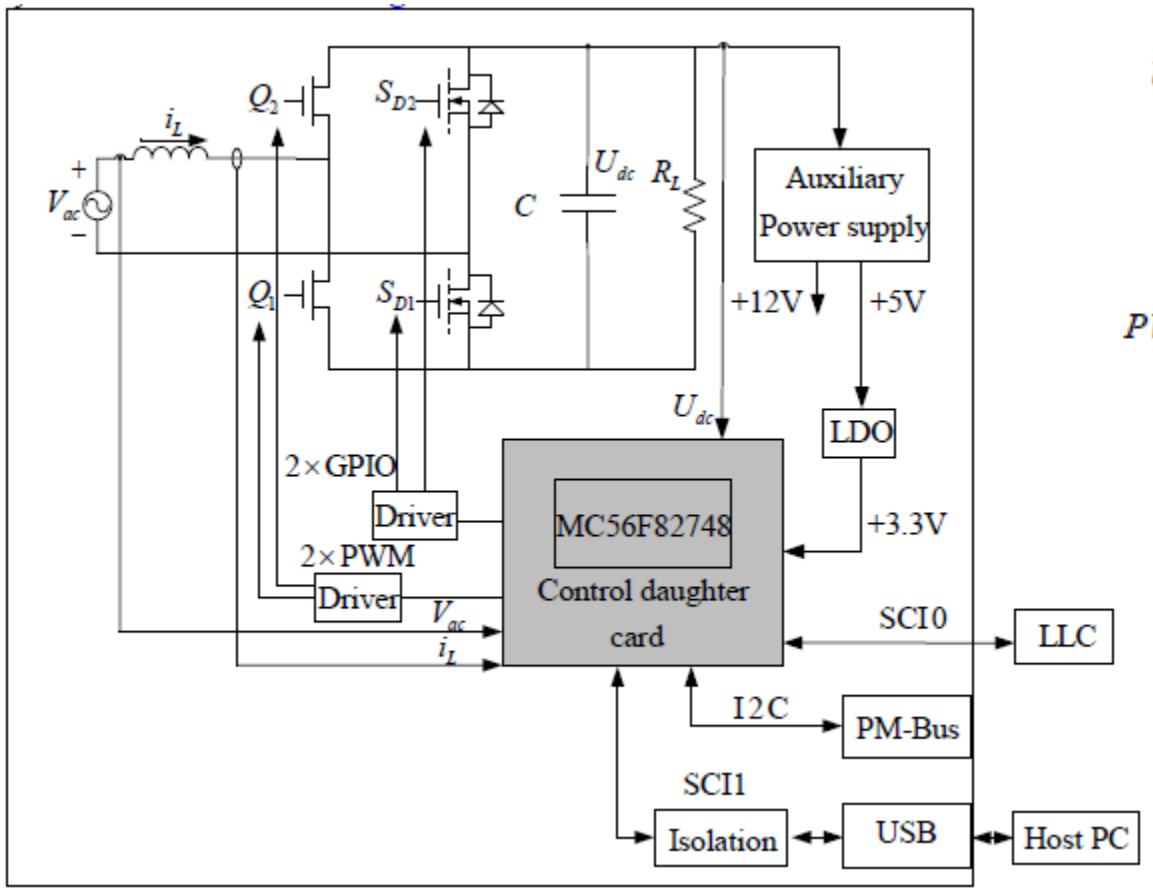

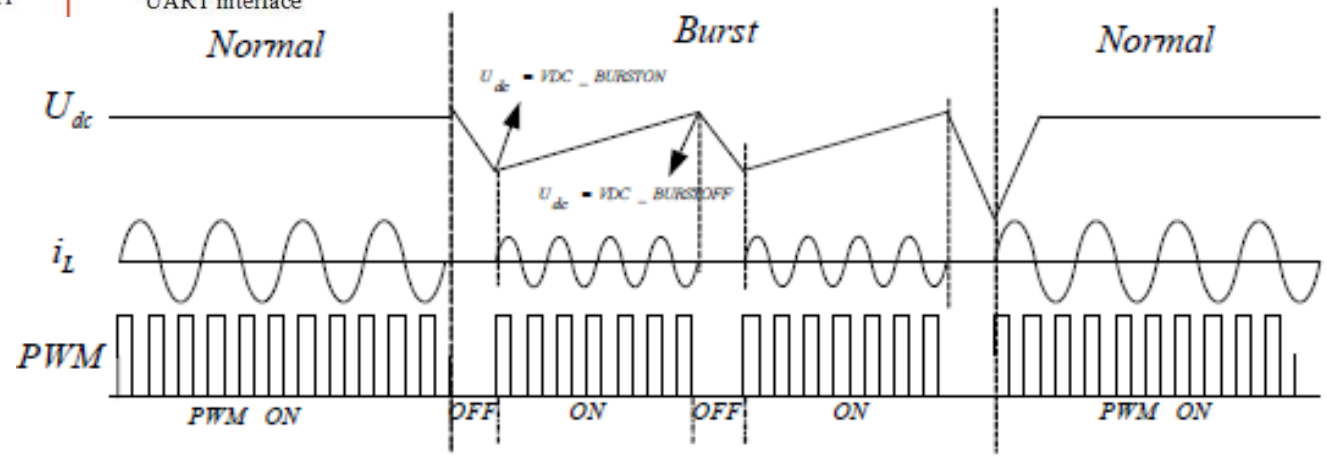

Figure 8. Illustration of normal mode and burst mode

Status

- 本页是图腾柱无桥PFC
- 另有Interleaved boost PFC(包括full-bridge rectifier)

NXP，LLC SOLUTION

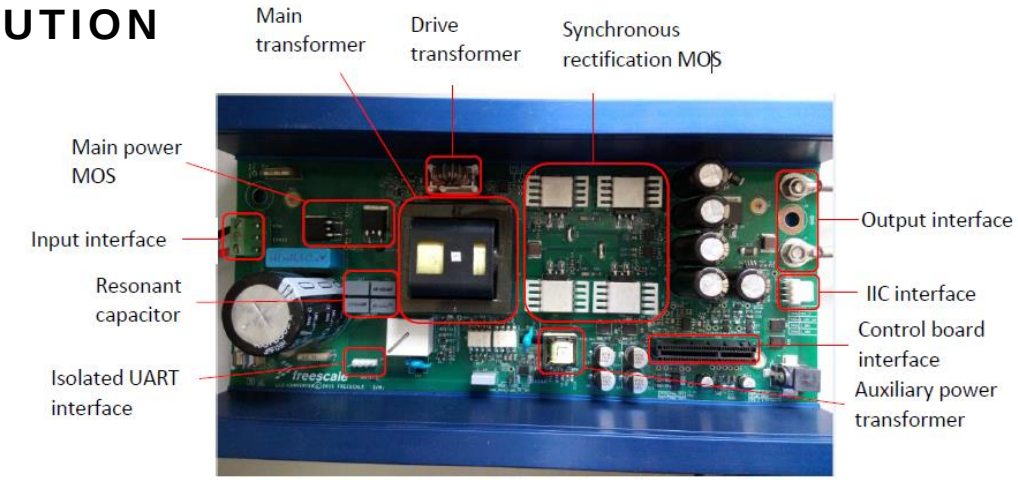

Figure 1. LLC main board

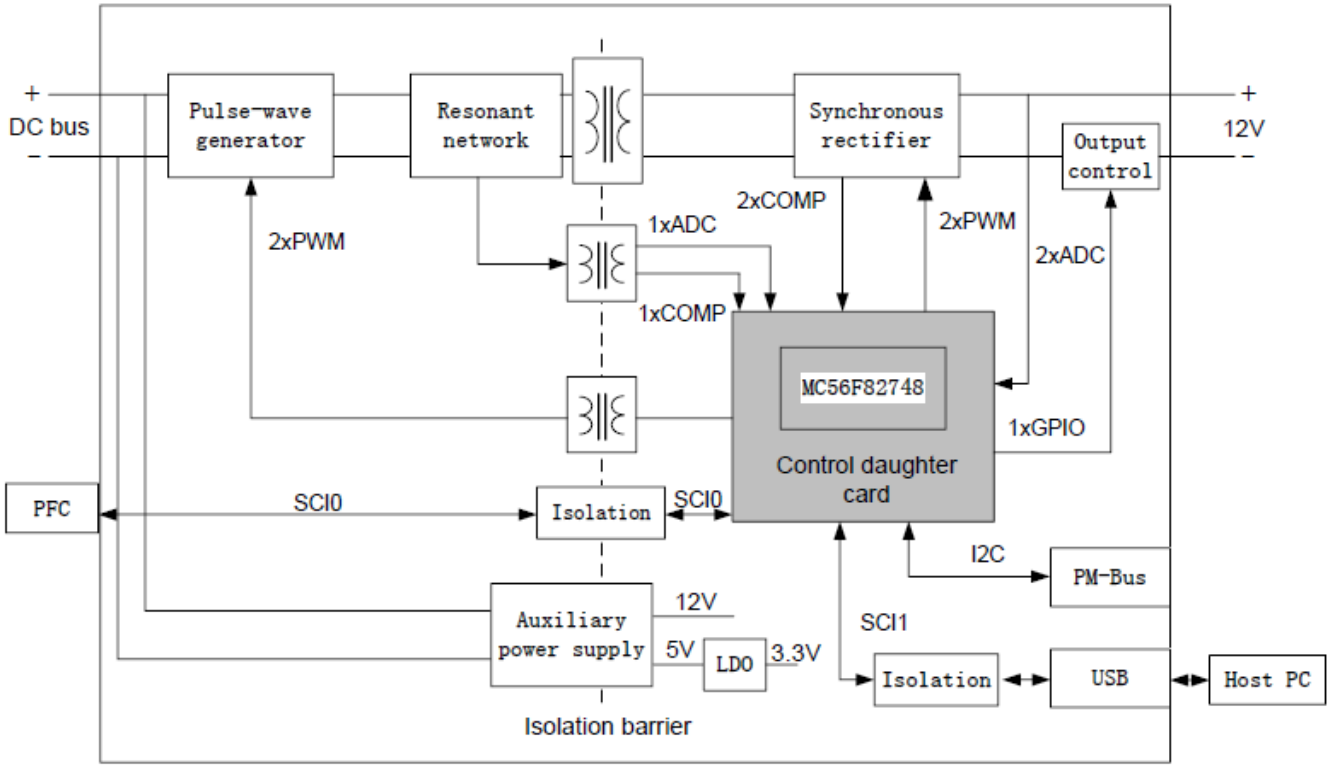

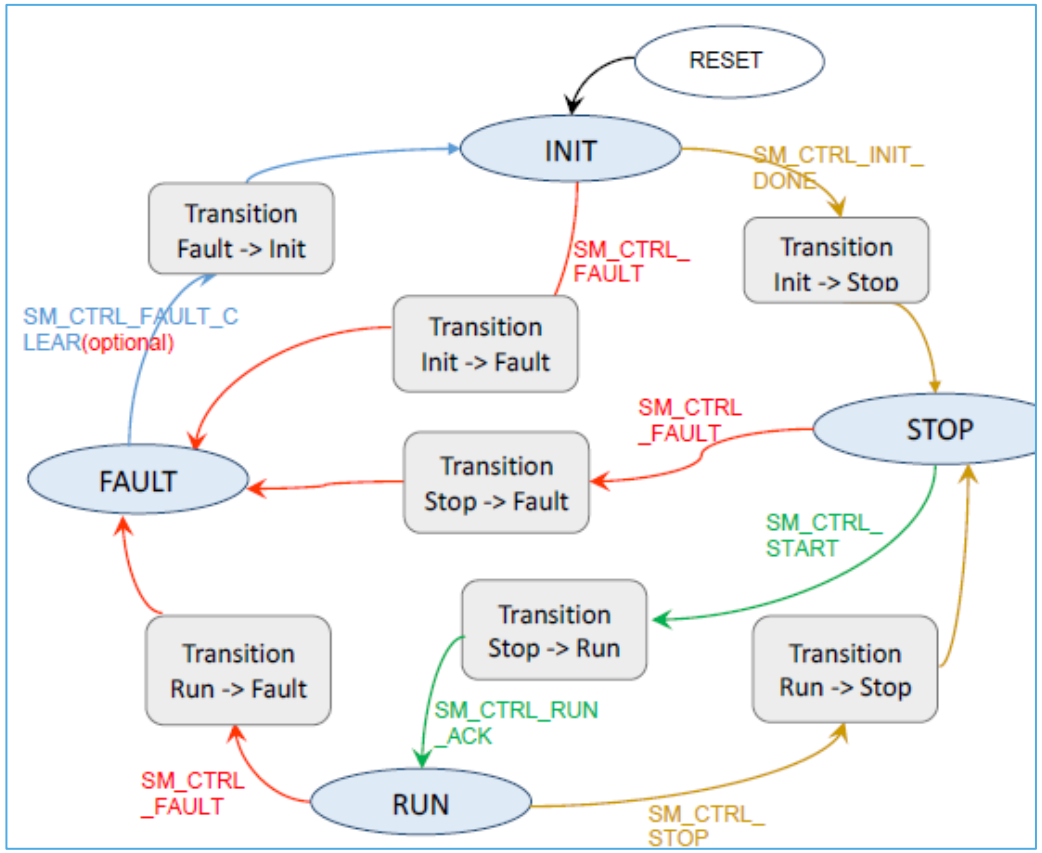

- 半桥谐振带同步整流
- 输入电压 330 ~ 400V
- 输出功率 240W(12V@20A)
- 工作频率 80 ~ 250kHz
- DSC 负责次级测和隔离驱动变压器谐振电流的硬件保护

NXP，PSFB SOLUTION

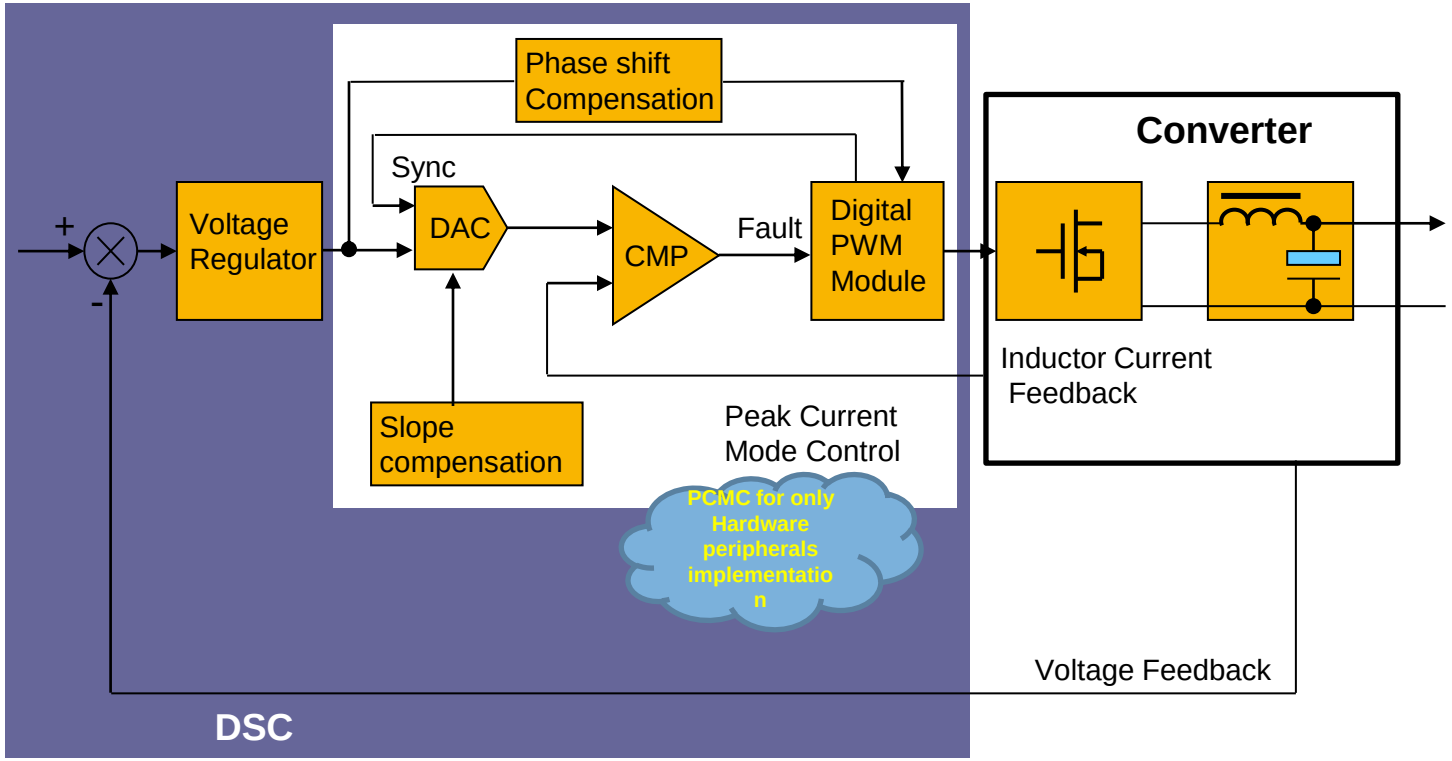

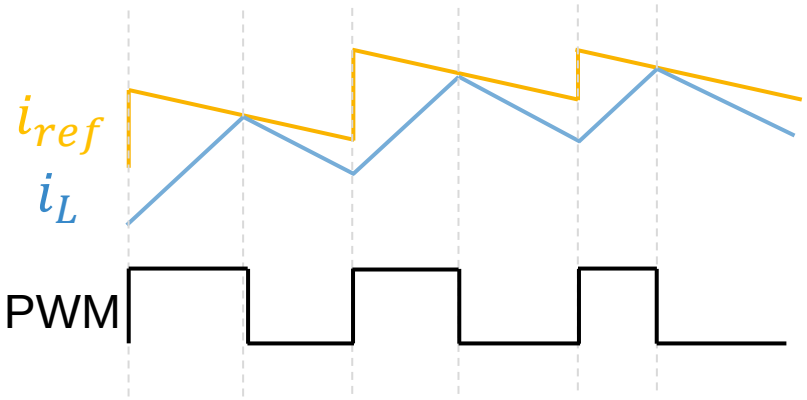

Window mode comparator → Only take effect when PWM is on for more reliable

12 Bit High Resolution DAC → Slop compensation with adjustable slow rate

PWM Signal Synchronization → CBC Peak Value control (cooperate with AOI to achieve minimum duty cycle control)

全硬件实现， DSC上实现的峰值电流控制，让比较器根据电压环路给出的电流命令逐周期控制占空比，以此快速控制电流

难点：
1) 电流信号的非理想特性处理
2) DAC实现高分辨率斜率补偿
3) Various topologies mapping

NXP SOLUTION, BI-DIRECTIONAL DC/AC CONVERTER

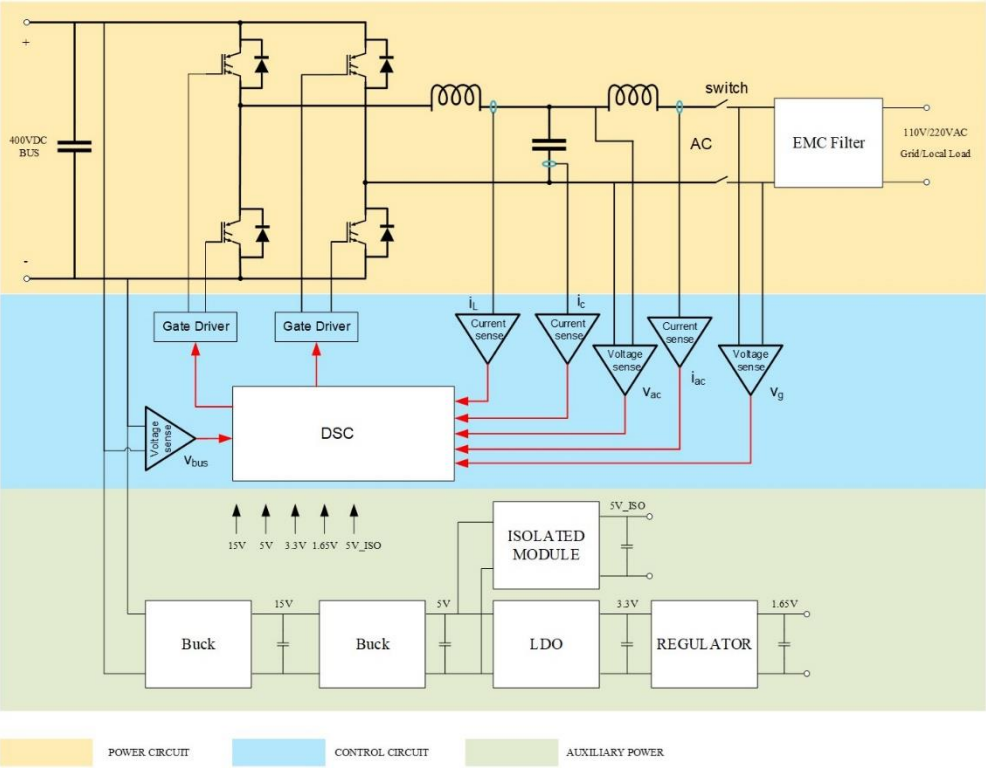

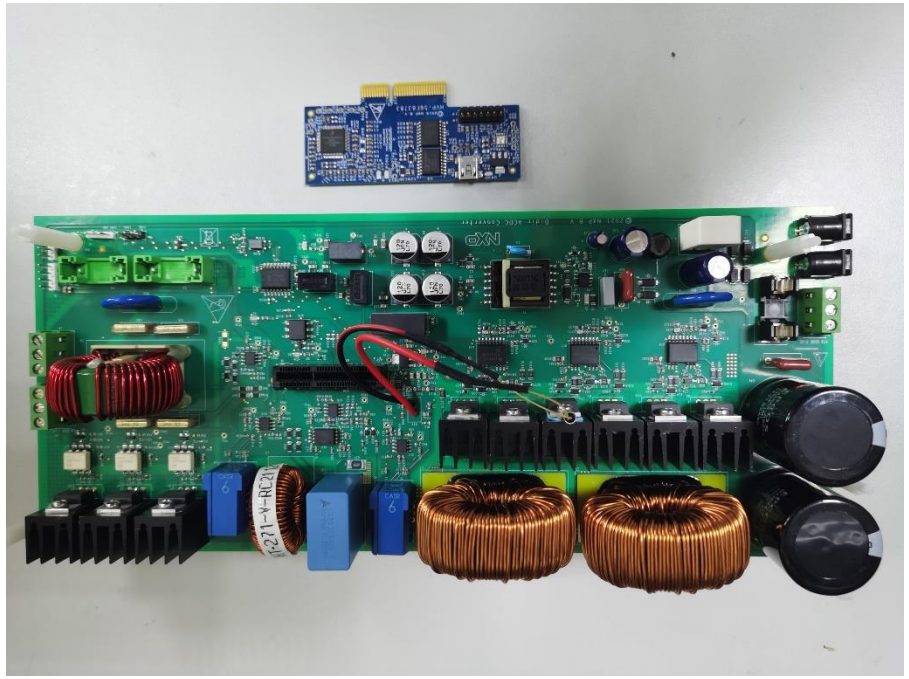

Feature

- Bi-directional DC/AC converter
- Single phase AC output/input
- Supports off-grid and grid-tied modes
- Reusing HVP daughter card

Status

- Power stage board is back
- Open loop mode works. Off-grid closed loop code is ready, will test and debug it after back to work at office

BU EDGE PROCESSING PRODUCTS

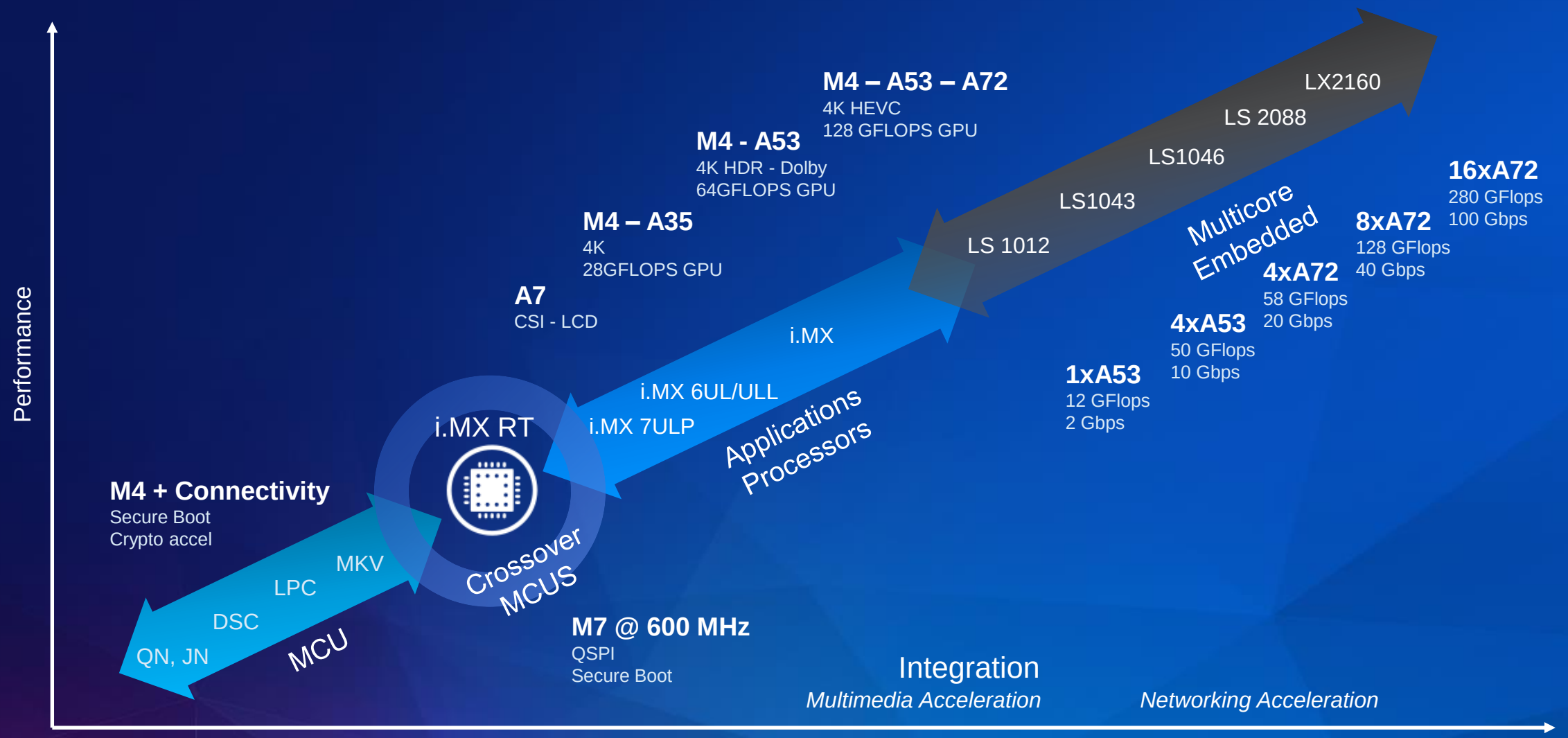

NXP'S ARM® CORTEX®-M BASED MCU PORTFOLIO

Performance & Integration	**i.MX RT Crossover MCUs** for Ultimate Real-time Performance & Integration
Performance Efficiency	Kinetis K, LPC54000 MCUs & **LPC5500 for Performance Efficiency**
Power Efficient	Kinetis L & **K32 L MCUs for Cost-, Power-Sensitive Applications， LPC55**
Value	**S08 (8-bit)** and **LPC800 (32-bit)** MCUs for Entry-Level Applications
Robust Industrial MCU	**KE (Industrial)** & **S32K (Automotive)** for Safe and Reliable 5V MCU Applications **DSC/ KV** for Motor Control & Digital Power; & **KM** for Metering Applications

LPC865- I3C, COST EFFECTIVE

Key Applications

PC accessories | BLDC Motor Control | Battery Management System

Consumer | Industrial | General Embedded

Key Features and Benefits

Performance enhancement & cost optimization of LPC800 series

- ARM ® Cortex ® -M0+ @60MHz
- 64 kB Flash, w/ 32B flash cache & prefetch buffer to speed up execution from Flash
- 8 kB RAM
- 8 kB boot ROM (support UART ISP)
- Mini Switch matrix for flexible I/O pin assignment

Enhanced Peripheral

- I3C (support >10MHz), compatible with I2C
- 3x UART; 2x SPI; 1x I2C (Fm)
- 1x 6ch + 1x 4ch FlexTimer (support PWM generation w/ hardware deadtime insertion, input capture and fault protection)
- 4-ch Multi-Rate Timer (MRT)
- 32-bit wakeup timer
- 12-bit, 1.9MSPS ADC, 12ch
- Analog comparator: 4 input pins
- Multi-Rate Timer (MRT)
- 32-bit wakeup timer

Ease of Use

- LQFP and HVQFN packages
- FreeRTOS with SDK
- Riche in application note and demo (BLDC with Hall / Sensorless BLDC / IoT Connection with Lora / Smart Battery Charger with SMBus)
- Comprehensive ecosystem

I3C 兼容IIC

Switch Matrix

Packages

- HVQFN33/48, LQFP64

MIPI I3C Fact Sheet

MIPI I3C Standardized Sensor Interface

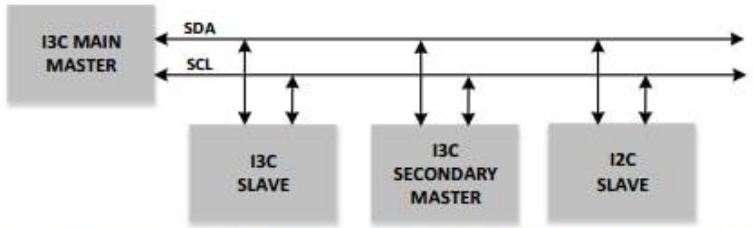

Two-wire communication interface, clock (SCL) and data (SDA)

Number of gates	< 2,000
Bandwidth	> 33 Mbps
Features	In-band interrupts In-band command codes Dynamic addressing Multi-master / multi-drop Hot-join support Backward compatible with I²C

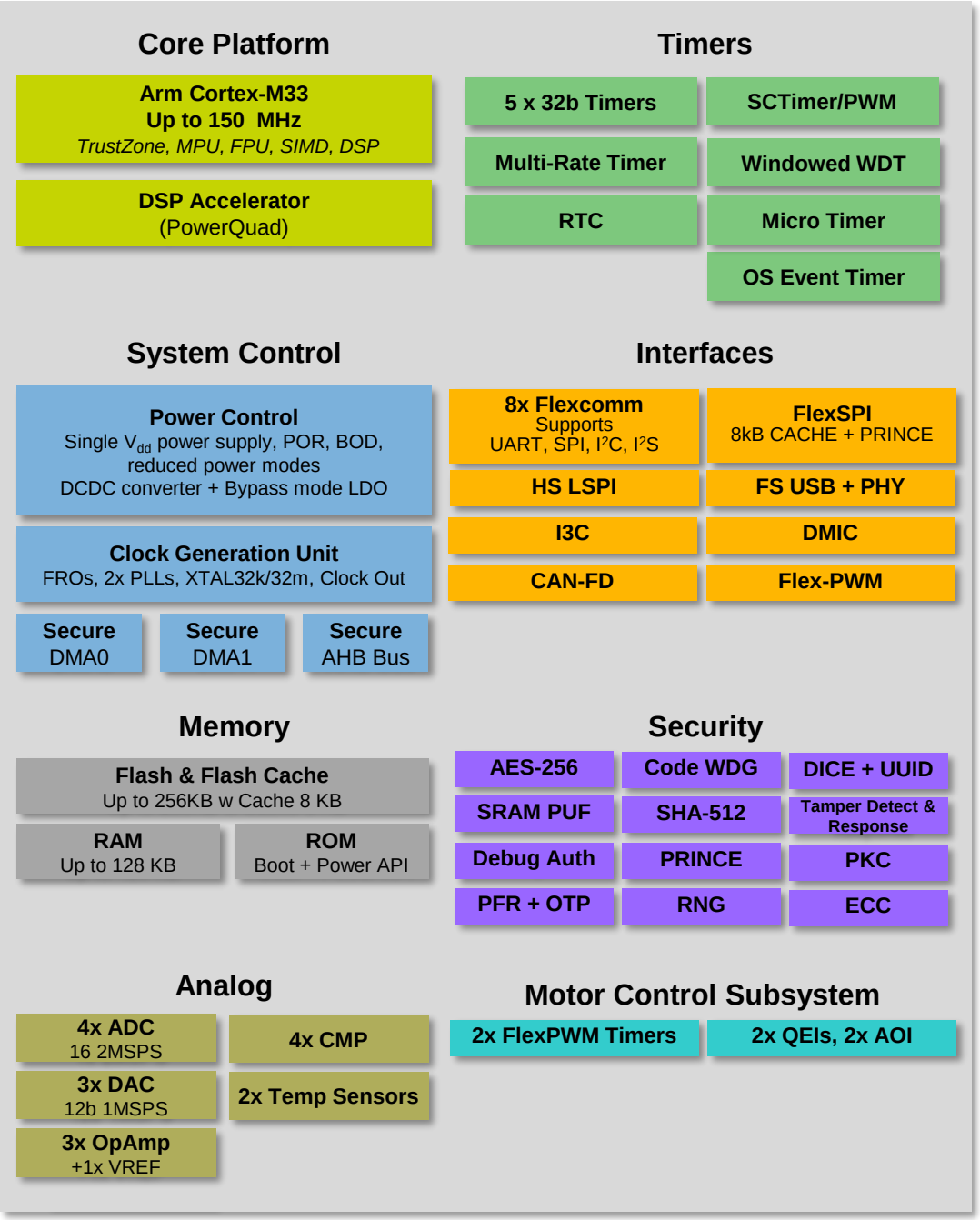

LPC553X / LPC55S3X BLOCK DIAGRAM

Core Platform

- Up to 150MHz Cortex-M33
  - TrustZone, MPU, FPU, SIMD, DSP
- DSP Accelerator (PowerQUAD, w CP intf)
- Secure Multilayer Bus Matrix

Memory

- Up to 256KB FLASH bank
  - 8kB Low Power Cache
- Up to 128KB RAM
  - 112KB with parity check
  - 16KB ECC RAM
- ROM

Timers

- 5 x 32b Timers
- SCTimer/PWM
- Muiti-Rate Timer
- Windowed Watchdog Timer
- RTC with Calendar function
- Micro Timer
- OS Event Timer

Analog

- 4x 16b ADC (Single ended) up to 23 ch
  - 2M sps 16bit
  - 3.3M sps 12bit
  - Up to 8 Differential/ 16 Single Ended channels
- Temperature Sensor
- 3x Analog Comparator
- 3x 12b 1Msps DAC
- 3x OpAmp

Packages

- HVQFN48, HLQFP64, HLQFP100
  - VFBGA98 and CSP upon request

Advanced Security

- AES-256, SHA-2, RNG
- ECC-256 (ECDSA, ECDH)
- PKC (Math accelerator)
- SRAM PUF for Key Generation support
- PRINCE real-time Encrypt/Decrypt for SPI flash
- Debug authentication
- Protected Flash Region (PFR)
- DICE and UID
- Code Watchdog IP (CodeWDG)
- Anti-tampering and Glitch Detector

Interfaces

- USB Full-speed (H/D), Crystal-less
- 1 x High-Speed SPI up to 50MHz (HS SPI)
- 8 x Flexcomms each supports SPI, I2C, UART, I^2S
  - I2S Pin-sharing
- External SPI -FlexSPI Interface support XIP
  - Octal/Quad Flash
  - with 8kCache
  - PRINCE to encrypt & decrypt on the fly
- 1x CAN-FD
- 1x I3C
- 1x DMIC 2 ch
- 2x FlexPWM with 4 sub-modules, providing 12 PWM outputs
- 2x Quadrature Encoder/Decoder (QEI)

Other

- Buck DC-DC
- Operating voltage: 1.8 to 3.6V
- Two Main IO supplies (VDDIO_1: 1.8 V to 3.6 V, VDDIO_2: 1.08 v to 3.6 V).
- Temperature range: -40 to 105 °C

KV系列：MOTOR CONTROL AND DIGITAL POWER CONVERSION

Key Peripherals for Motor and Power Control Applications

MCU Family	Core	Memory	Motor Control Timers: Flextimer	Motor Control Timers: eFlexPWM	ADC	DAC	ACMP	Comms.	Packages
KV5x	240MHz CM7 DSP + FPU	512kB-1MB Flash	2 x 8ch 1x 2ch FlexTimer	2 x 12ch eFlexPWM + Nano-Edge	4 x 12bit 5Msps, 1 x 16bit	1x 12-bit	4x ACMP with 6-bit DAC	Ethernet, 3 x CAN	144 pin 100 pin
KV4x	160MHz CM4 DSP + FPU	64-256kB Flash	2 x 8ch 1x 2ch FlexTimer	12ch eFlexPWM + Nano-Edge	2x 12bit 4.1Msps / 1.9Msps	2x 12-bit	4x ACMP with 6-bit DAC	2 x CAN	100 pin 64 pin 48 pin
KV3x	100/120MHz CM4 DSP + FPU	64-512kB Flash	2x 8ch 2x 2ch FlexTimer	-	2x 16-bit 1.2Msps	2x 12-bit	2x ACMP with 6-bit DAC	-	100 pin 64 pin 48 pin 32 pin
KV1x	75MHz CM0+ H/W DIV & SQRT	16-32kB Flash	1x 6ch 2x 2ch FlexTimer	-	2x 16-bit 1.2Msps	1x 12-bit	2x ACMP with 6-bit DAC	1 x CAN	64 pin 48 pin 32 pin

Scalable performance, timing and analog functionality based on application need

KV SERIES KV4X: BLOCK DIAGRAM

Core/System
•150MHz Cortex-M4, FPU

Memory
•64/128/256KB Flash @ 128bits wide w/ 128Byte cache
•16/24/32KB SRAM
•Bootloader

Communications
•Up to 2 x CAN, Multiple serial ports

Analog
•2 x 8ch 12-bit ADC, up to 4.1MS/s
    •PGA x1, x2, x4
•12-bit DAC
•4 x ACMP with 6-bit DAC

Timers
•Up to 12ch eFlexPWM
    •Up to 312ps PWM and PFM
•2x8ch + 1x2ch FlexTimer (PWM)
•Quadrature Encoder
•2 x Programmable Delay Blocks

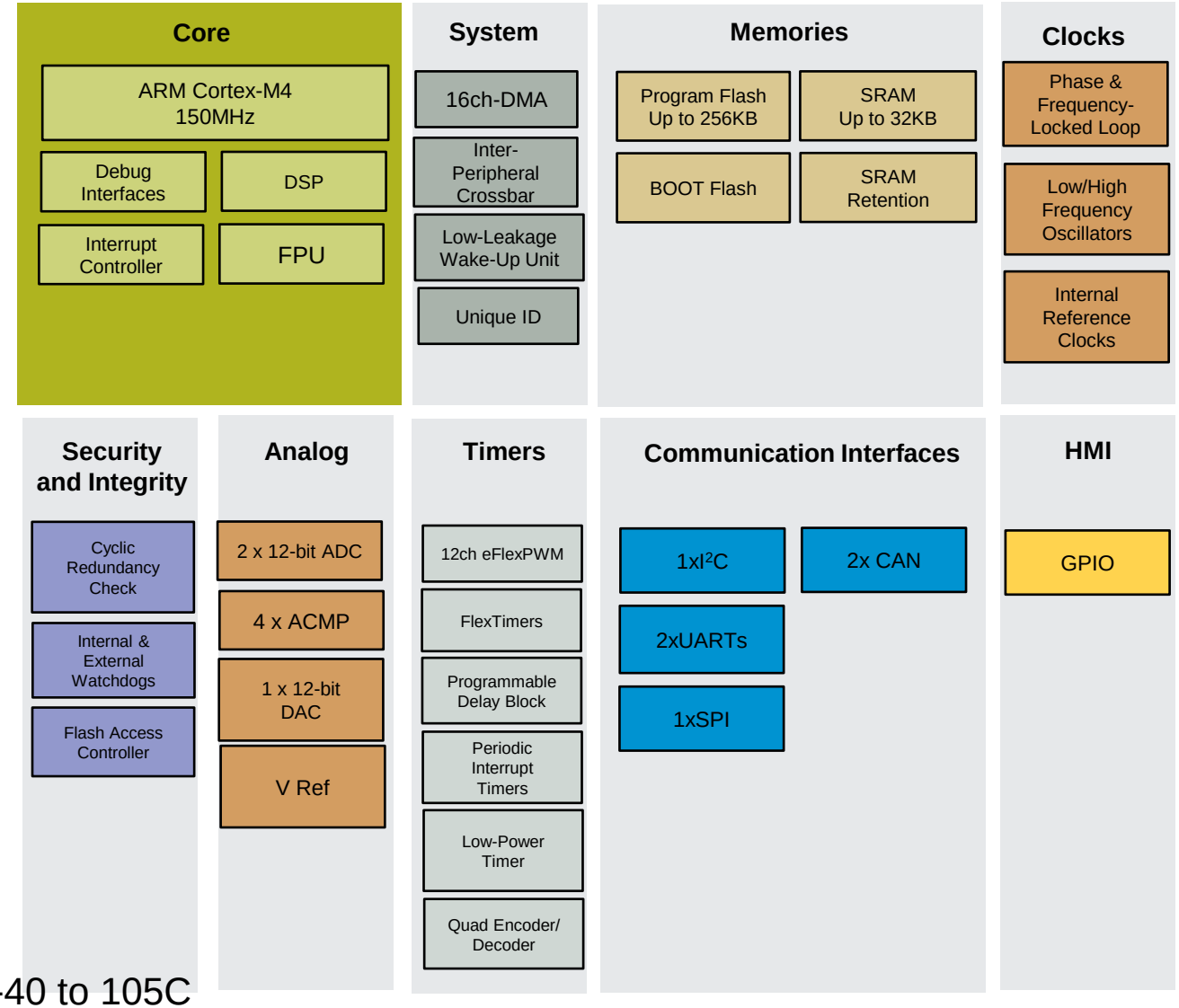

Other
•32-bit CRC
•1.71V-3.6V; -40 to 105C
•Inter-Peripheral Crossbar with AOI

Packages
• 48LQFP, 64 LQFP & 100LQFP

KV5X MCU FAMILY

Key Features:

Core/System
- 240MHz Cortex-M7 with FPU and 32ch DMA
- 16KB Instruction Cache / 8KB Data Cache

Memory
- 512KB/1MB Flash, 256bits wide, 128 Bytes cache
- 128/256KB SRAM
- Boot Flash

Communications
- Multiple serial ports
- 3 x FlexCAN

Analog
- 4 x 8ch 12-bit ADC
  - 5Msps Sample Time
- 1 x 16-bit SAR ADC
- 1 x12-bit DAC
- 4 x ACMP w/ 6b DAC

Timers
- 1 x 12ch eFlexPWM
  - 312ps PWM and PFM Resolution
- 1 x 12ch eFlexPWM
- 2x8ch FlexTimer (PWM)
- 2x2ch FlexTimer (PWM)
- Quadrature Encoder
- 2 x Programmable Delay Blocks
- Low-Power Timer

Others
- MMCAU & RNG
- 32-bit CRC
- Inter-module Crossbar Switch with AOI
- Memory Protection Unit
- 1.71V-3.6V; -40 to 105oC

Packages
- 100LQFP, 144LQFP, 144MAPBGA

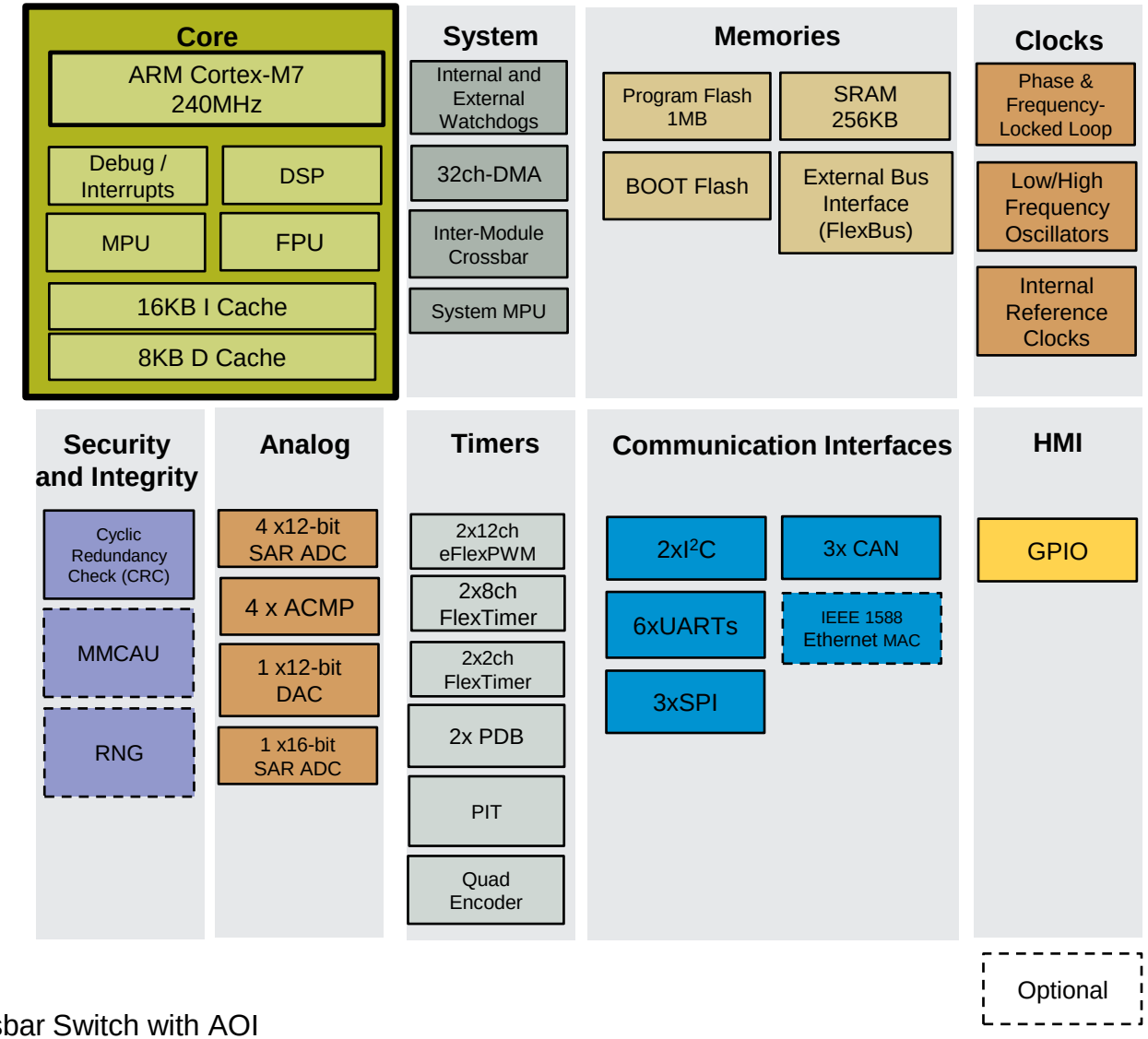

www.nxp.com/dsc

Expert of Power and Motor –Efficient digital power conversion and advanced motor control applications.

High Performance DSC Core

- 56800EX Hawk V3 Core, 100 MHz of performance
- FIR Filter 6x faster than ARM Cortex-M3
- The highest number of operations per cycle of any MCU in its class
- Fractional arithmetic
- Superfast interrupt

The low power DSC on the market

- Less than 0.3mA/MHz at full speed run
- Concurrent operations offer better execution times and overall low power run rates.

Intelligent Peripherals, Advanced Integration

- eFlexPWM – Advanced timer for Digital Power Conversion with 312ps resolution
- Cross-Bar - Directly connecting any input and/or output with logic functions
- High speed, high impedance cyclic ADCs to capture events real time.
- 125°C and AEC-Q100 for automotive applications

Outstanding Tools & Enablement

- CodeWarrior - Highly visual, Eclipse based IDE
- MCUXpresso SDK - An opensource software development kit
- MCUXpresso Config Tools - A comprehensive suite of system configuration tools, including pins, clocks, peripherals and more
- RTCESL - Run time library for easy development
- FreeMASTER - GUI debug oscilloscope
- Processor Expert & QuickStart - GUI config tools
- Plenty of Reference Designs for power and motor

DIGITAL SIGNAL CONTROLLER ROADMAP

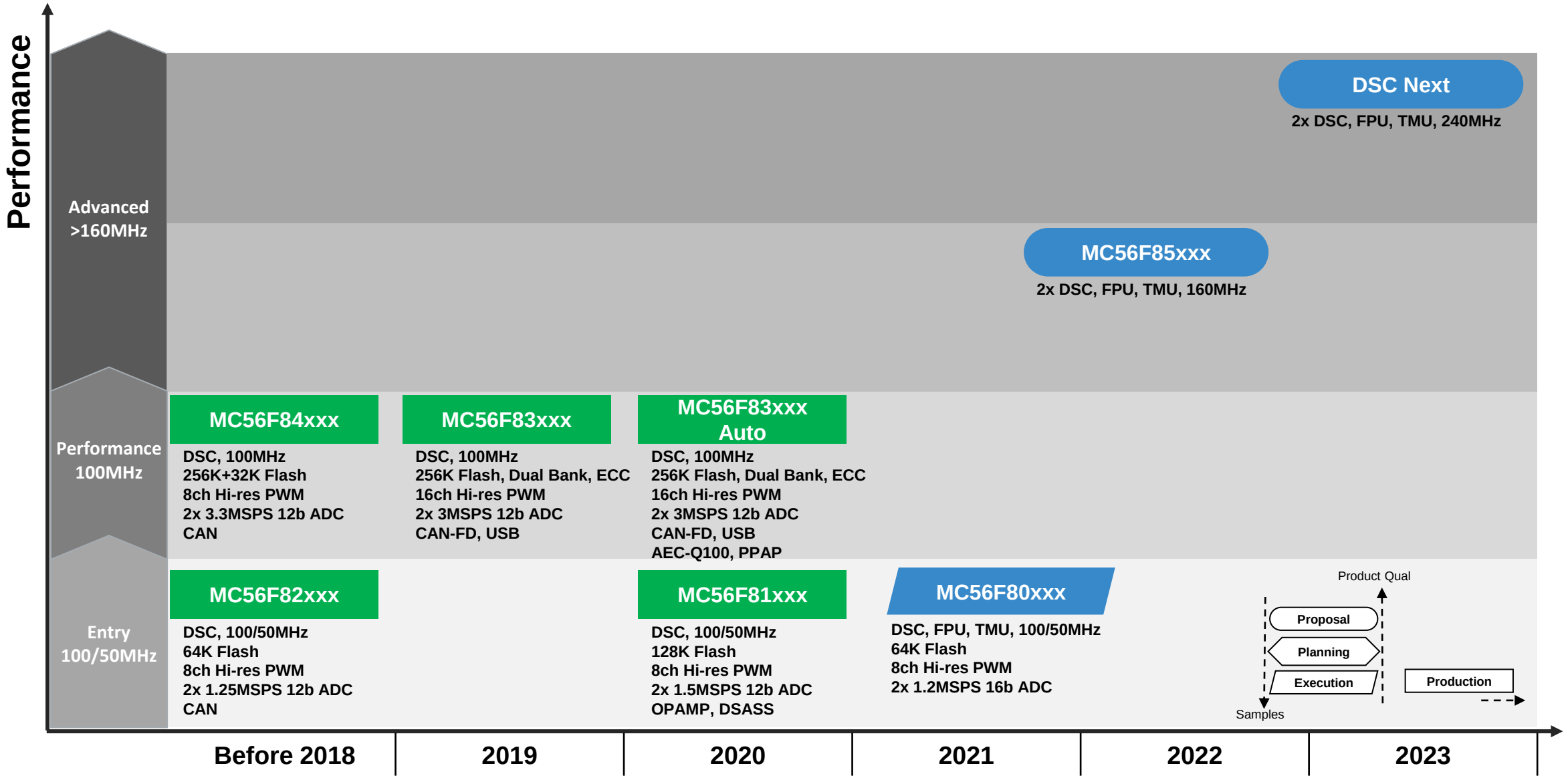

恩智浦数字信号控制器（DSC）系列

恩智浦32位数字信号控制器(DSC)基于32位568000EX内核，在单一芯片中集成了微控制器(MCU)的功能和强大的数字信号处理(DSP)能力。恩智浦提供一系列数字信号处理和控制解决方案，适用于各种应用，从通用嵌入式市场到电机控制和能源转换。随着新的56F83和56F81系列产品的推出，32位DSC产品组合变得更加强大、完整，以满足数字电源和电机控制领域日益增长的最终客户需求。

产品系列	CPU	存储	主要特性	目标应用
MC56F81xxx 入门级电机控制/电源转换	56800EX 32位 DSC 内核 100/50 MHz	64~128 KB Flash 12~20 KB RAM 64 KB Boot ROM	高精度PWM, 运放OPAMP, DSASS, 2x12位 ADC, ACMP, 12位DAC, -40~105℃/125℃ 引脚数32~64	**数字电源:** 开关电源（SMPS）和电源管理 不间断电源（UPS） 配电系统 光伏系统 户外电源，储能系统 **电机控制:** 工业电机 家用电器 **汽车:** 新能源/混合动力汽车车载充电器 新能源/混合动力汽车DC-DC变换器 新能源/混合动力汽车充电桩 新能源/混合动力汽车电机，压缩机 **其它:** 智能照明 断路器 变频器
MC56F82xxx 入门级电机控制/电源转换	56800EX 32位 DSC 内核 100/50 MHz	32~64 KB Flash 6~8 KB RAM	高精度PWM, 2x12位 ADC ACMP, 12位DAC MSCAN AEC-Q100 -40~105℃/125℃ 引脚数32~64	
MC56F3xxx 高性能电机控制/电源转换	56800EX 32位 DSC 内核 100 MHz	128~256 KB Flash w/ECC, dual bank 48~64 KB RAM 32 KB Boot ROM	高精度PWM, 2x12位 ADC ACMP, 12位DAC CAN FD, USB FS OTG AEC-Q100 -40~105℃/125℃ 引脚数64~100	
MC56F84xxx 高性能电机控制/电源转换	56800EX 32位 DSC 内核 60~100 MHz	64~256 KB Flash 8~32 KB RAM 32 KB FlexMem	高精度PWM, 2x12位 ADC 16位ADC, ACMP, 12位DAC FlexCAN -40~105℃ 引脚数48~100	

EFLEXPWM – 312PS HIGH RESOLUTION PWM

- **312ps resolution**, suitable for digital power applications
- **Flexible** PWM control and **multi modes**
  - Center, edge-aligned, and asymmetrical PWMs
  - Complementary PWM pairs
  - Phase shifted & double switching PWM outputs
  - Independent control of both edges of each PWM output
  - Full and half cycle reload capability
  - Individual software control for each PWM output
- Synchronization & Trigger
  - Support for synchronization to external hardware or other PWM
  - Multiple output trigger events can be generated per PWM cycle
- Safety
  - Fault inputs can be assigned to control multiple PWM outputs
  - Programmable filters for fault inputs
  - Fault automatic clearing
  - Independent top and bottom deadtime insertion
- Multiple functions support
  - Channels not used for PWM generation can be used for input capture functions, dual edge

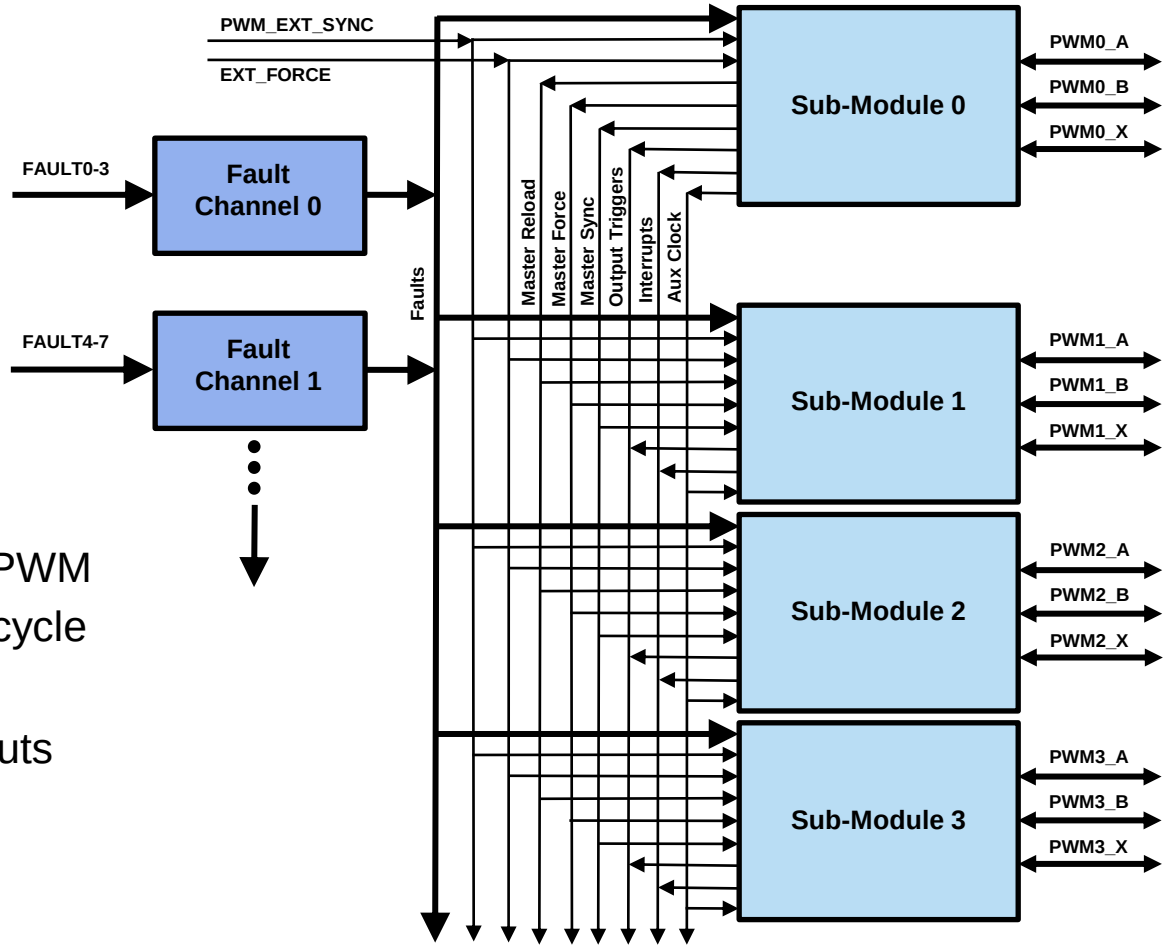

12-BIT HIGH SPEED CYCLIC ADC

- High input impedance, suitable for current sensing
- Max. 300ns conversion rate, up to 6.67 MSPS when two ADC work simultaneously (parallel mode)
- Flexible trigger mode include once, triggered or loop scan
- Can be synchronized to other peripherals by internal Crossbar, such as the PWM
- Improved Accuracy
  - Integrated PGA (x2, x4) for small signal detection
  - Optional sample correction by pre-programmed offset
  - Support single-end and differential mode
- Multiple Functions
  - Optional interrupts at end of scan if there's an out of high/low limit or there is a zero crossing

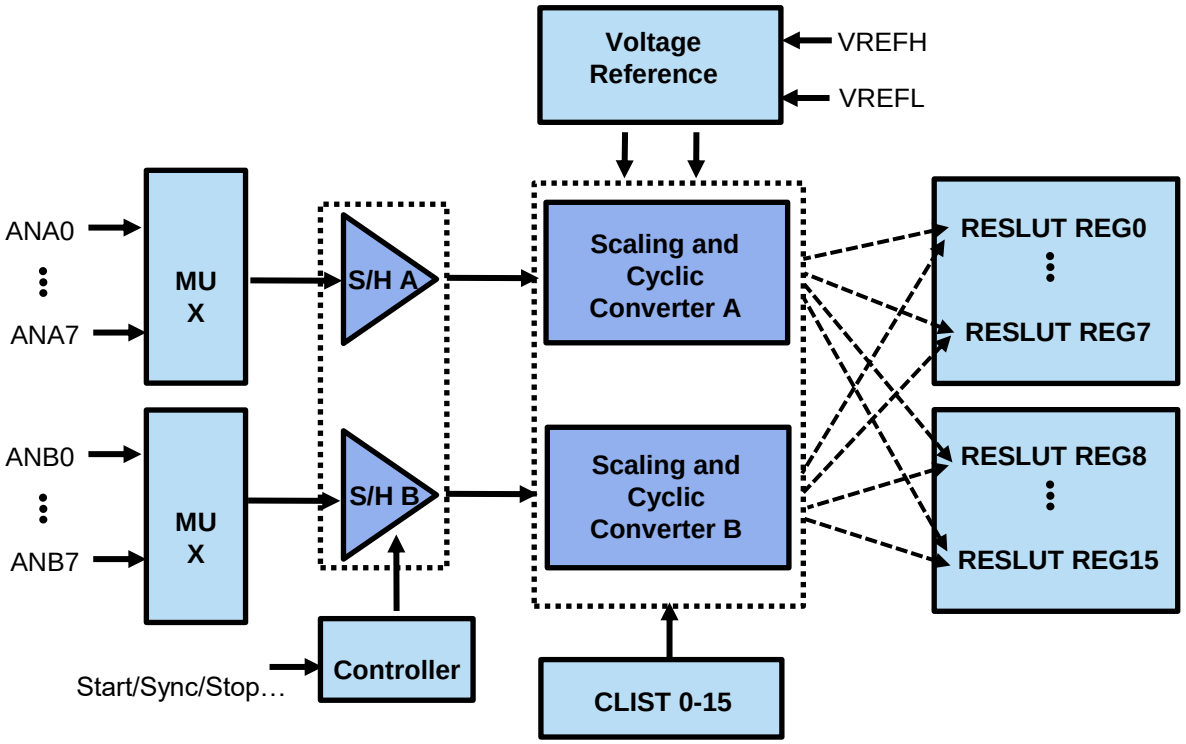

MULTI-MODE OPAMP

- Integrated two identical op-amp circuit, both with 8MHz GBP, suitable for fast and accurate voltage and current sensing in power conversion and motor control applications
- Suitable for low side detection, output rail-to-rail
- Both op-amp can work in three modes:
- Op-amp mode
- PGA mode (Gain 2/4/8/16)
- Follower mode
- Output directly connect to ADC and ACMP input

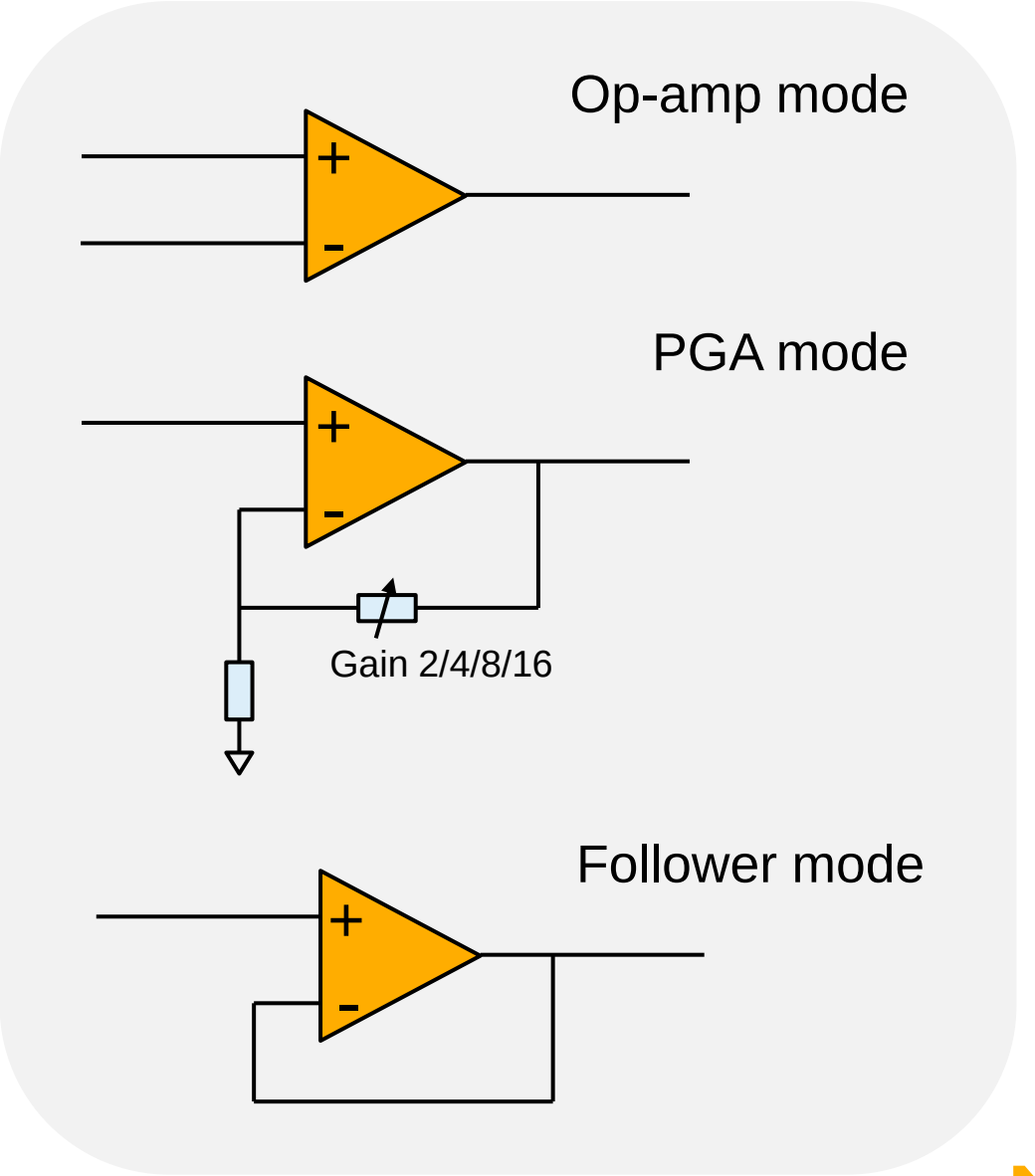

FLASH SWAP –MC56F837XX

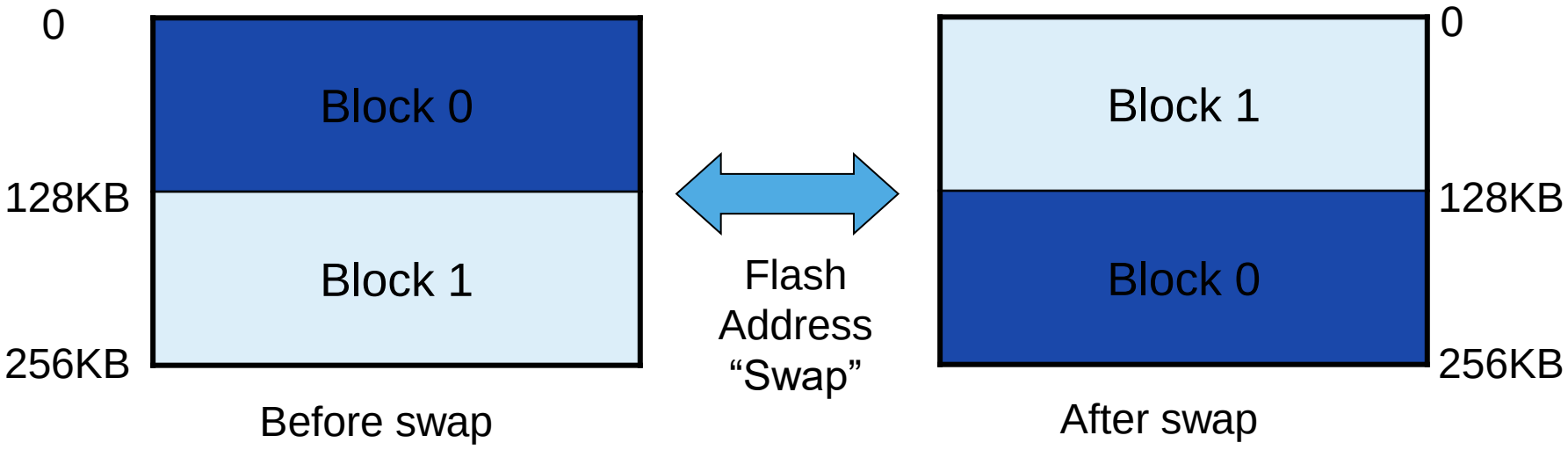

- MC56F83xxx has two blocks of Flash
- User can execute from block 0 while re-programming block 1
- When block 1 is ready for execution, user completes the swap process by executing a SWAP command and a reset
- The addresses of block 0 and block 1 exchanges after reset. Program now executes in block 1 because it is mapped to address range which starts from 0

NXP'S FIRST DSC WITH HIGH-END CRYPTO – DSASS

- **DSASS** = **D**igital **S**ignature **A**lgorithm **S**ecurity **S**ubsystem
- DSASS contains HW realization of below algorithms:
  - Elliptical Curve Cryptography (ECC) based digital signature authentication
  - SHA256
  - True random number generator (TRNG)
- Complete APIs and example codes to utilize the crypto capability

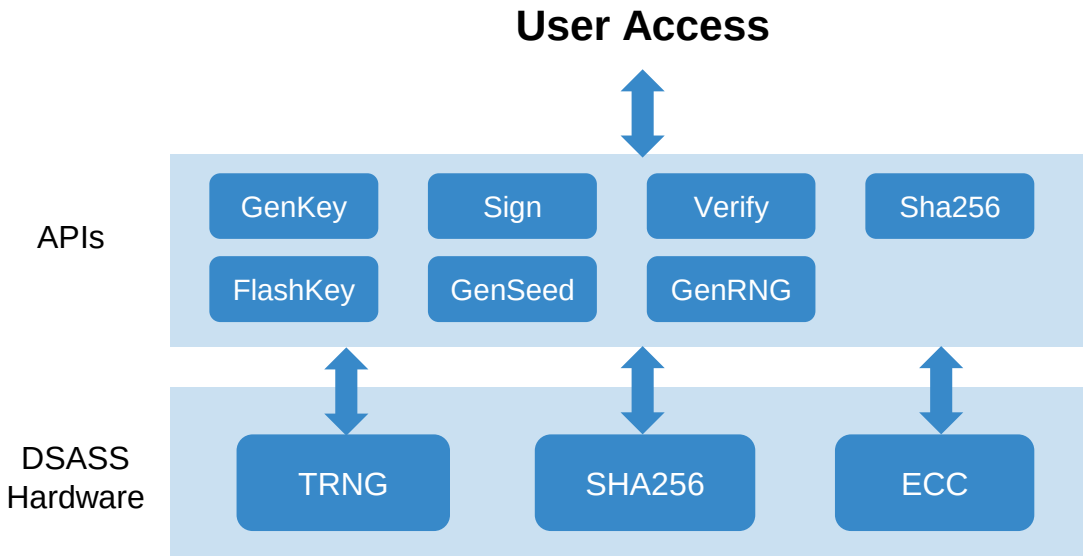

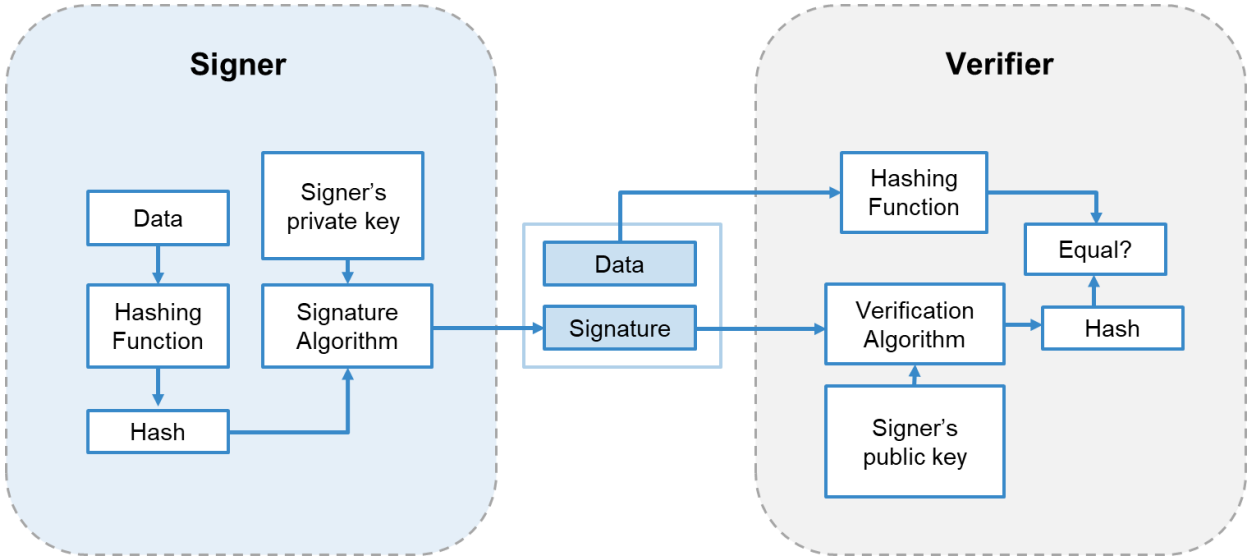

Development Tools

SECURE CONNECTIONS
FOR A SMARTER WORLD

MCUXpresso Software and Tools

for General Purpose MCUs and Crossover Processors

MCUXpresso IDE

Edit, compile, debug and optimize in an intuitive and powerful IDE

MCUXpresso SDK

Runtime software including peripheral drivers, middleware, RTOS, demos and more

MCUXpresso Config Tools

Online and desktop tool suite for system configuration and optimization

MCUXpresso Secure Provisioning Tool

Graphical and command line tool for securely provisioning and programming MCUs with secure boot

DSC还支持 CodeWarrior IDE

STREAMLINED MCUXPRESSO DEVELOPMENT FLOW

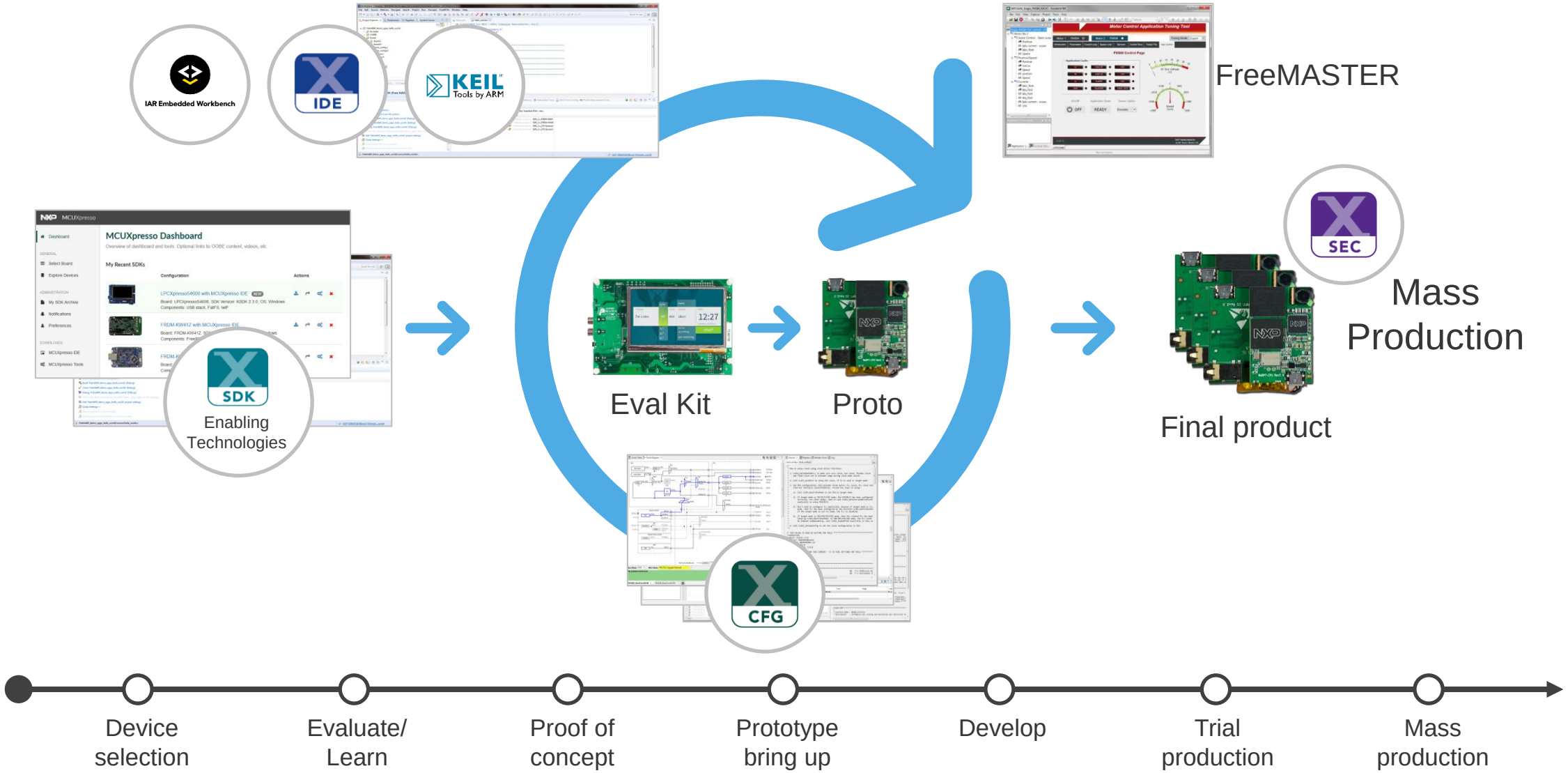

TOOLS – ALL FREE FOR 32-BIT DSC!

- **IDE - CodeWarrior Development Studio for DSC v11.x** (Compiler optimization ongoing!)
  - **License Free!**
  - Eclipse Front End for industry standard interface
- **Config GUI – MCUXpresso Config Tool - Pins, Clocks, Peripherals**
  - Includes pins, clocks and peripheral tools to speed up the development
- **MCUXpresso SDK**
  - A comprehensive software enablement package designed to simplify and accelerate application development
- **Library – RTCESL** (**Real Time Control Embedded Software Library**)
  - For motor control and power conversion common APIs
  - Include Math / General Function / General Motor Control / General Digital Filter / Advanced Motor Control / Power Control library
- **Run-time Debugging Tool – FreeMASTER**
  - Non-intrusive monitoring of variables on a running system
  - Oscilloscope-like display

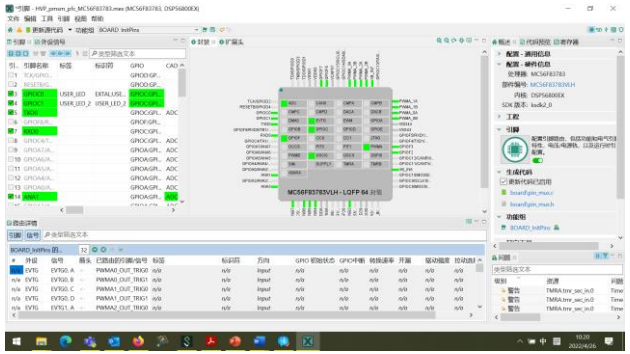

Config Tool GUI

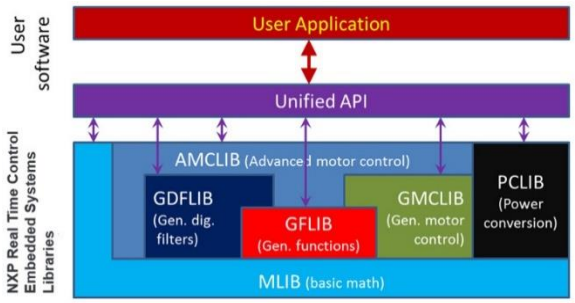

RTCESL

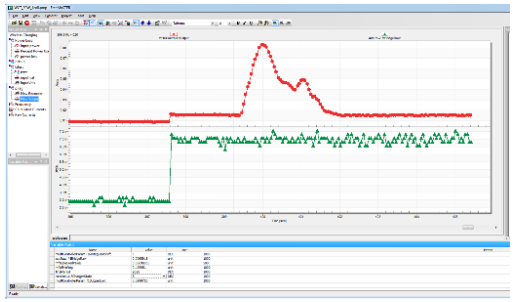

FreeMASTER

FREEMASTER USAGE

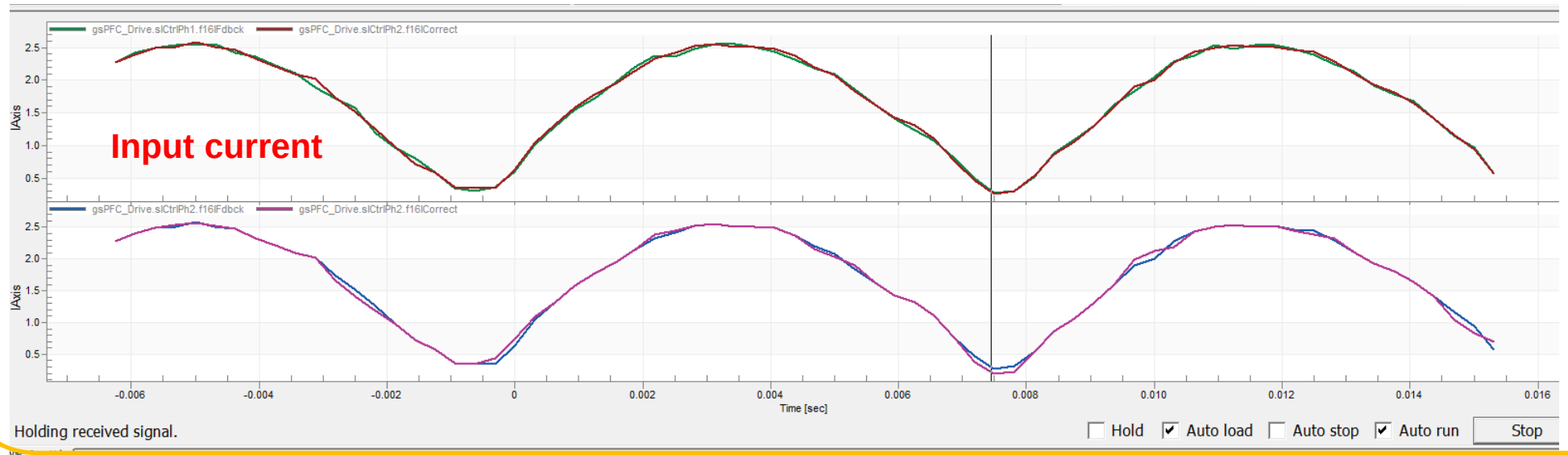

Recorder window

Variable Watch

Name	Value	Unit	Period [ms]
gsPFC_Ctrl.eState	Run	ENUM	1000
ePFC_StateRunSub	Normal	ENUM	1000
gsPFC_Drive.sUCtrl.f16UDcBusCmd	399.991	Volt	1000
gsPFC_Drive.sUCtrl.f16UDcBusFilt	397.917	Volt	1000
mbMC_SwitchAppOnOff	OFF	ENUM	1000
gsMC_Drive.sSpeed.f16SpeedCmd	0	RPM	1000
Motor+PFC loading	879, 208, 2961	(VAL, MIN, MAX)	0
PFC fast loop loading	344, 246, 469	(VAL, MIN, MAX)	0
w16ExeTimePfc_slowloop	814, 63, 938	(VAL, MIN, MAX)	0
gsPFC_Drive.sPFCalculate.f16UInRMS	107.735	unit	1000
gsPFC_Drive.sPFCalculate.f16IInRMS	3.62207	unit	1000
gsPFC_Drive.sPFCalculate.f32ActivePowerAver	388.108	unit	1000
gsPFC_Drive.sPFCalculate.f32ApparentPower	388.243	unit	1000
gsPFC_Drive.sPFCalculate.f16PowerFactor	0.999207	unit	1000

Variable watch

FreeMaster window

SECURE CONNECTIONS
FOR A SMARTER WORLD