FlexRay有源星形耦合器——两个分支

TJA1086G

Last Updated: Mar 21, 2025

TJA1086G是FlexRay™有源星形耦合器，可连接FlexRay网络的两个分支。TJA1086G符合FlexRay电气物理层规范V3.0.1/ISO17458-4。

- 多个TJA1085G和TJA1086G器件可以通过其TRXD0/1接口进行连接，增加网络中的分支数
- 专用通信控制器接口允许集成到ECU。
- 支持通过提供总线唤醒功能以及电池供电和稳压器控制支持低功耗管理
- 符合针对EMC/ESD性能的行业标准，提供增强型总线错误检测、低功耗和无与伦比的非对称延迟性能。

TJA1086G Block Diagram

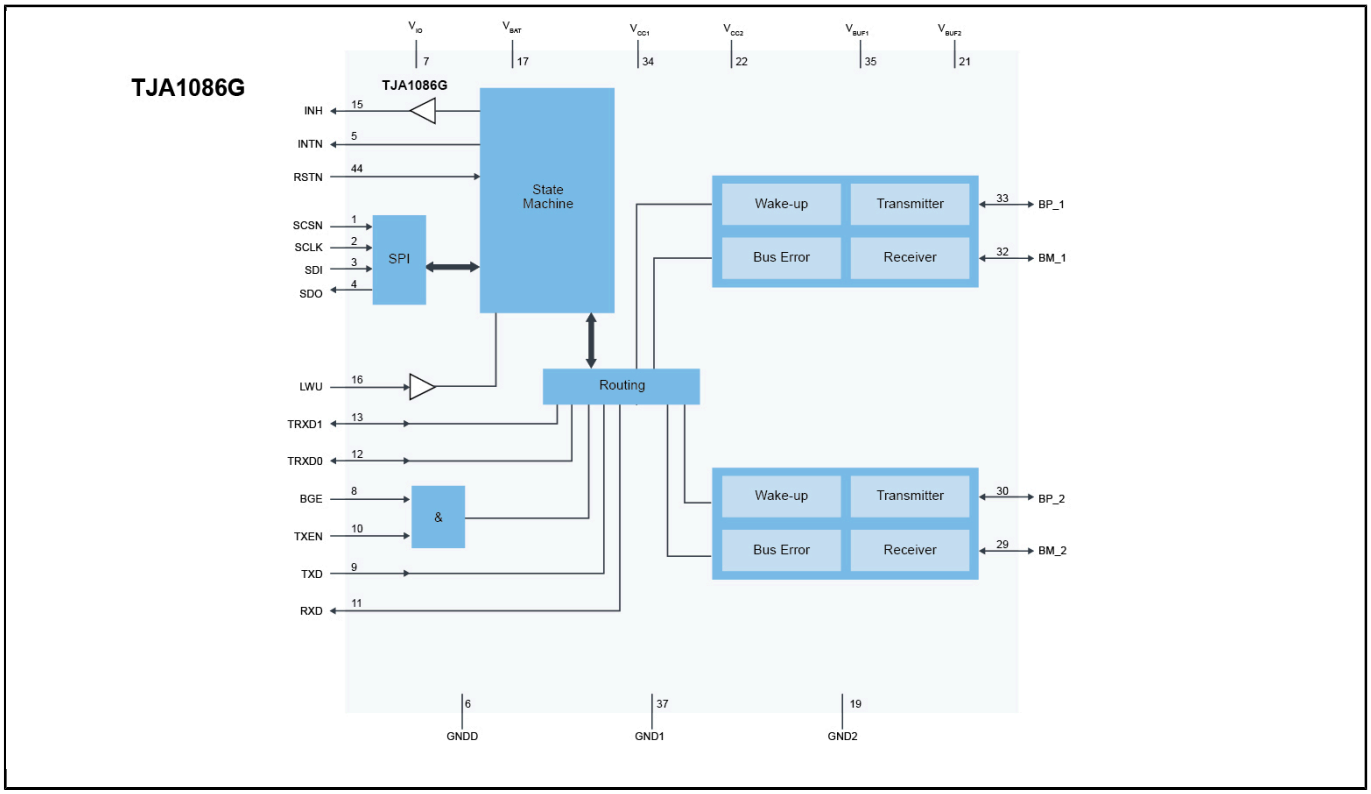

有源星形耦合器，可连接**FlexRay**网络的两个分支 **Block Diagram**

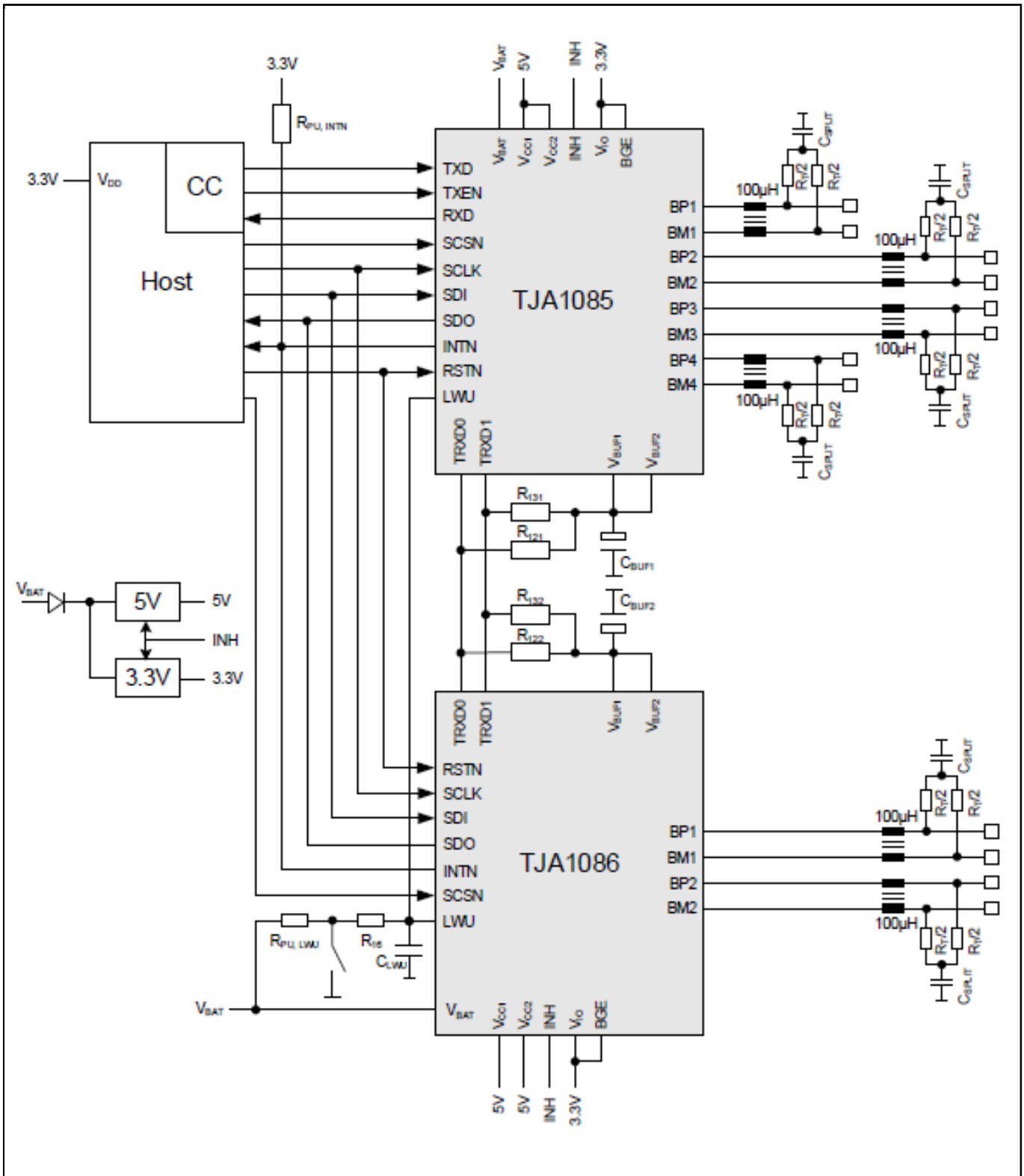

Commonly used buffer capacitors at the V_{BAT}, V_{IO}, V_{CC1}, V_{CC2}, V_{BUF1} and V_{BUF2} pins are not shown

View additional information for FlexRay有源星形耦合器——两个分支.

Note: The information on this document is subject to change without notice.

www.nxp.com

NXP and the NXP logo are trademarks of NXP B.V. All other product or service names are the property of their respective owners. The related technology may be protected by any or all of patents, copyrights, designs and trade secrets. All rights reserved. © 2025 NXP B.V.