Clock and Calendar with 240 X 8-bit RAM

PCF8583

建议不要在新设计中使用该软件
建议不要在新设计中使用本页介绍的产品。

Last Updated: Apr 11, 2024

The PCF8583 is a clock and calendar chip, based on a 2048 bit static CMOS1 RAM organized as 256 words by 8 bits. Addresses and data are transferred serially via the two-line bidirectional I²C-bus. The built-in word address register is incremented automatically after each written or read data byte. Address pin A0 is used for programming the hardware address, allowing the connection of two devices to the bus without additional hardware.

The built-in 32.768 kHz oscillator circuit and the first 8 bytes of the RAM are used for the clock, calendar, and counter functions. The next 8 bytes can be programmed as alarm registers or used as free RAM space. The remaining 240 bytes are free RAM locations.

Clock and Calendar with 240 X 8-bit RAM Block Diagram

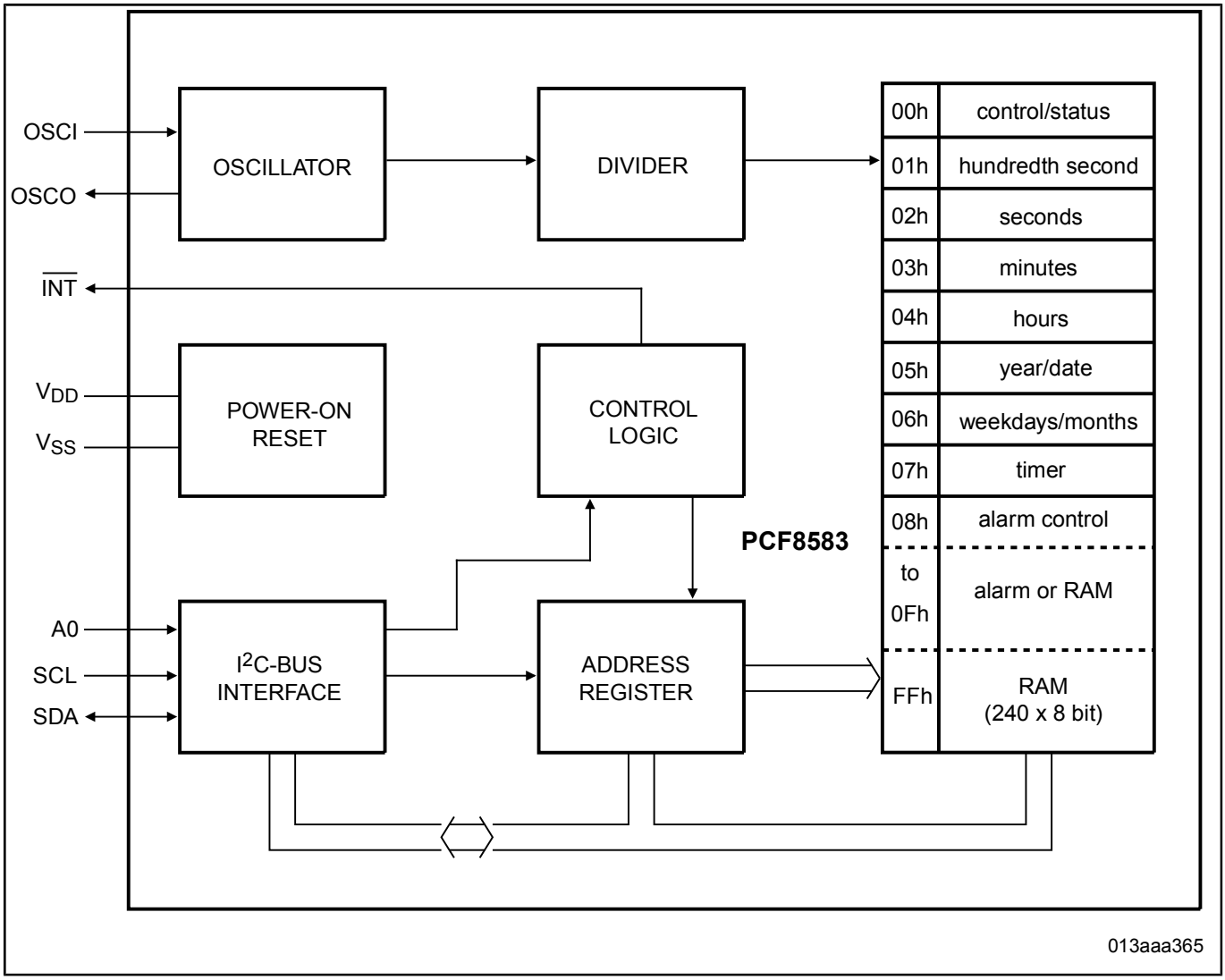

PCF8583BS, PCF8583P, PCF8583T, PCF8583U Block Diagram

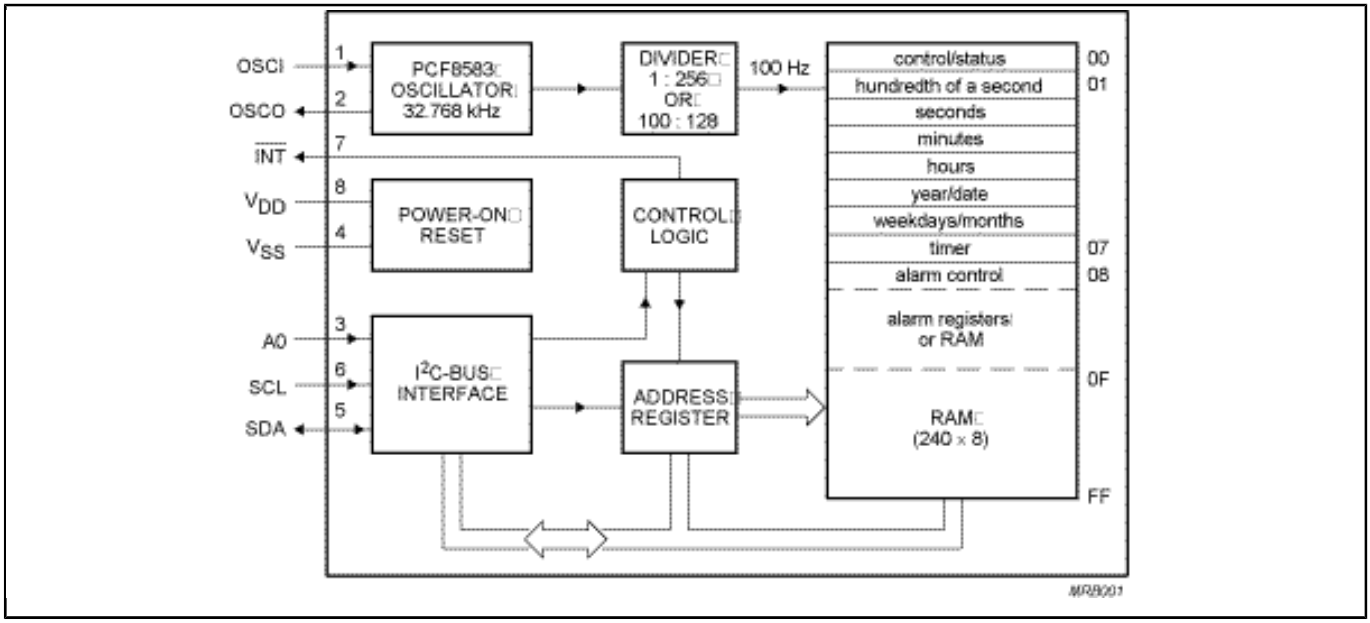

View additional information for Clock and Calendar with 240 X 8-bit RAM.

Note: The information on this document is subject to change without notice.