SPI Real-Time Clock/Calendar

PCF2123

Last Updated: Mar 10, 2025

PCF2123是一款CMOS实时时钟(RTC)和日历，最适合低功率应用。通过串行外设接口(SPI-bus)以6.25 Mbit/s的最大数据速率串行传送数据。还提供警报和定时器功能，可在中断引脚上生成唤醒信号。偏移寄存器允许对时钟进行精细调整。

PCF2123 Block Diagram Block Diagram

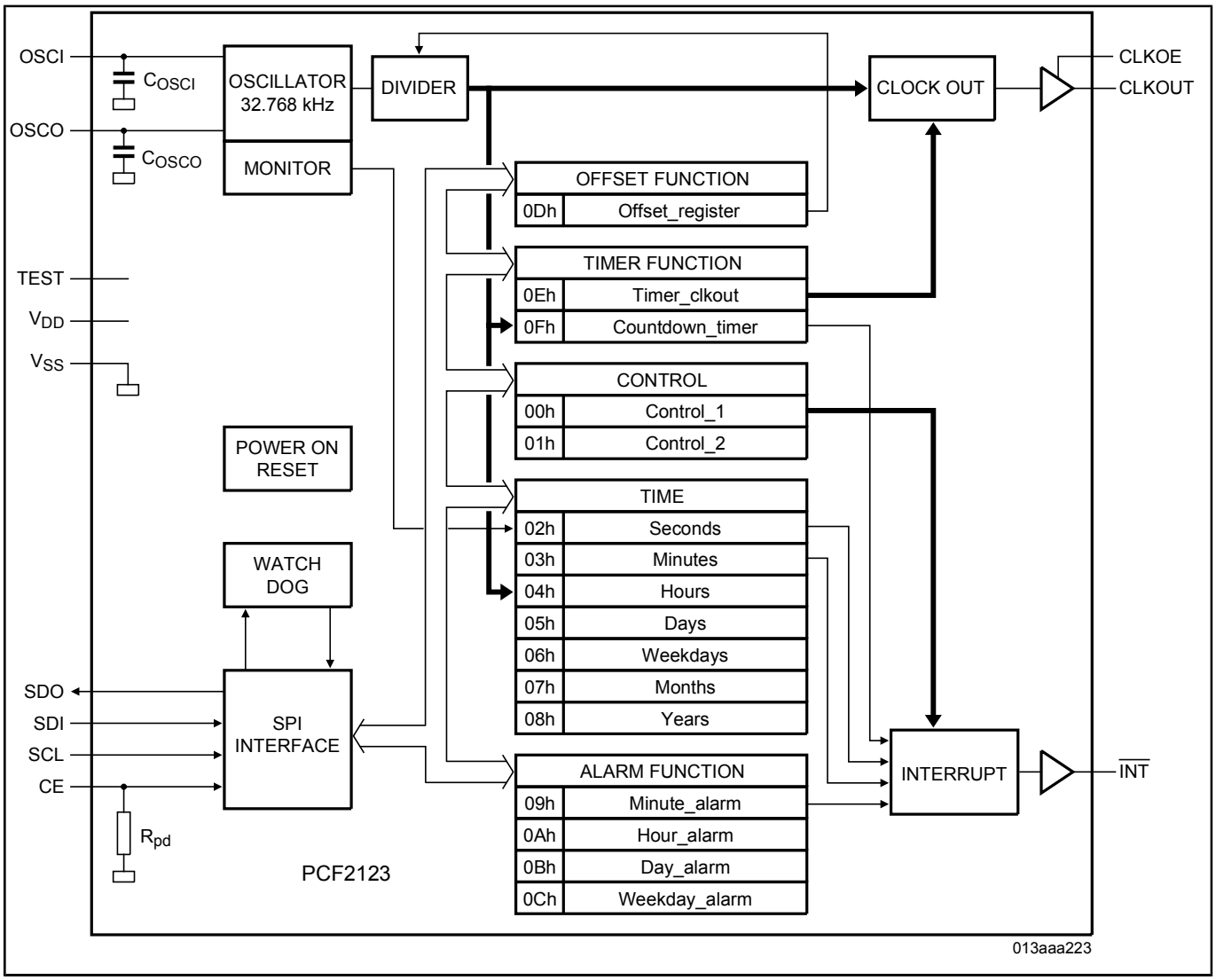

Block diagram: PCF2123TS, PCF2123U Block Diagram

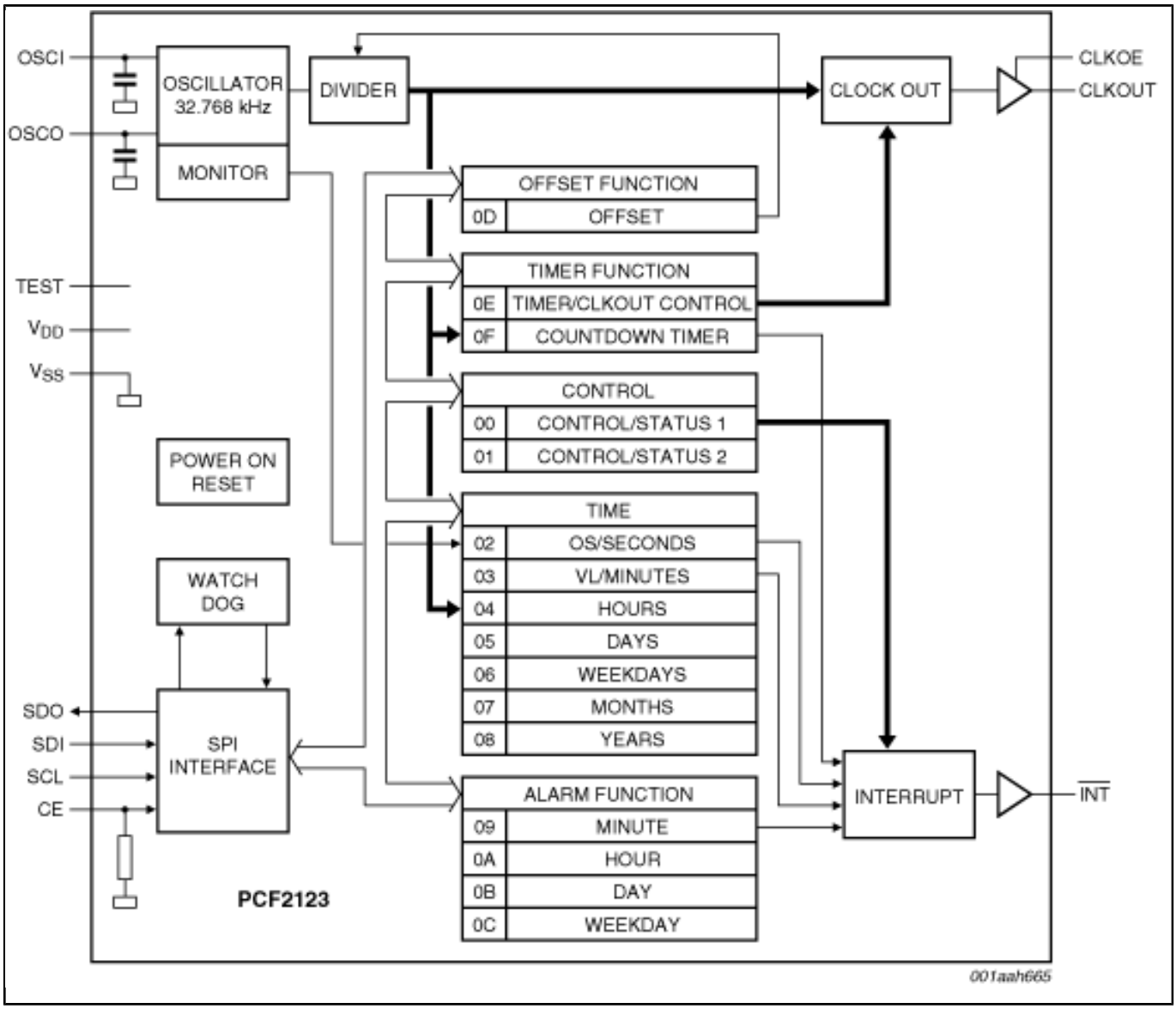

View additional information for SPI Real-Time Clock/Calendar.

Note: The information on this document is subject to change without notice.

www.nxp.com
NXP and the NXP logo are trademarks of NXP B.V. All other product or service names are the property of their respective owners. The related technology may be protected by any or all of patents, copyrights, designs and trade secrets. All rights reserved. © 2025 NXP B.V.