4位多路复用/1位闭锁的5位I2C EEPROM DIP开关

PCA8550

Last Updated: Sep 17, 2025

4位二选一 I²C多路复用器的主要功能是从非易失性寄存器选择4位输入或数据并将该值驱动至输出引脚。还提供一个额外的非多路复用寄存器输出。非多路复用输出为闭锁，以防I²C写入非易失性寄存器过程中输出值发生改变。提供写保护输入以启用/禁用写入非易失性寄存器的能力。“超驰”输入功能强制所有输出为逻辑0。

PCA8550 Block Diagram Block Diagram

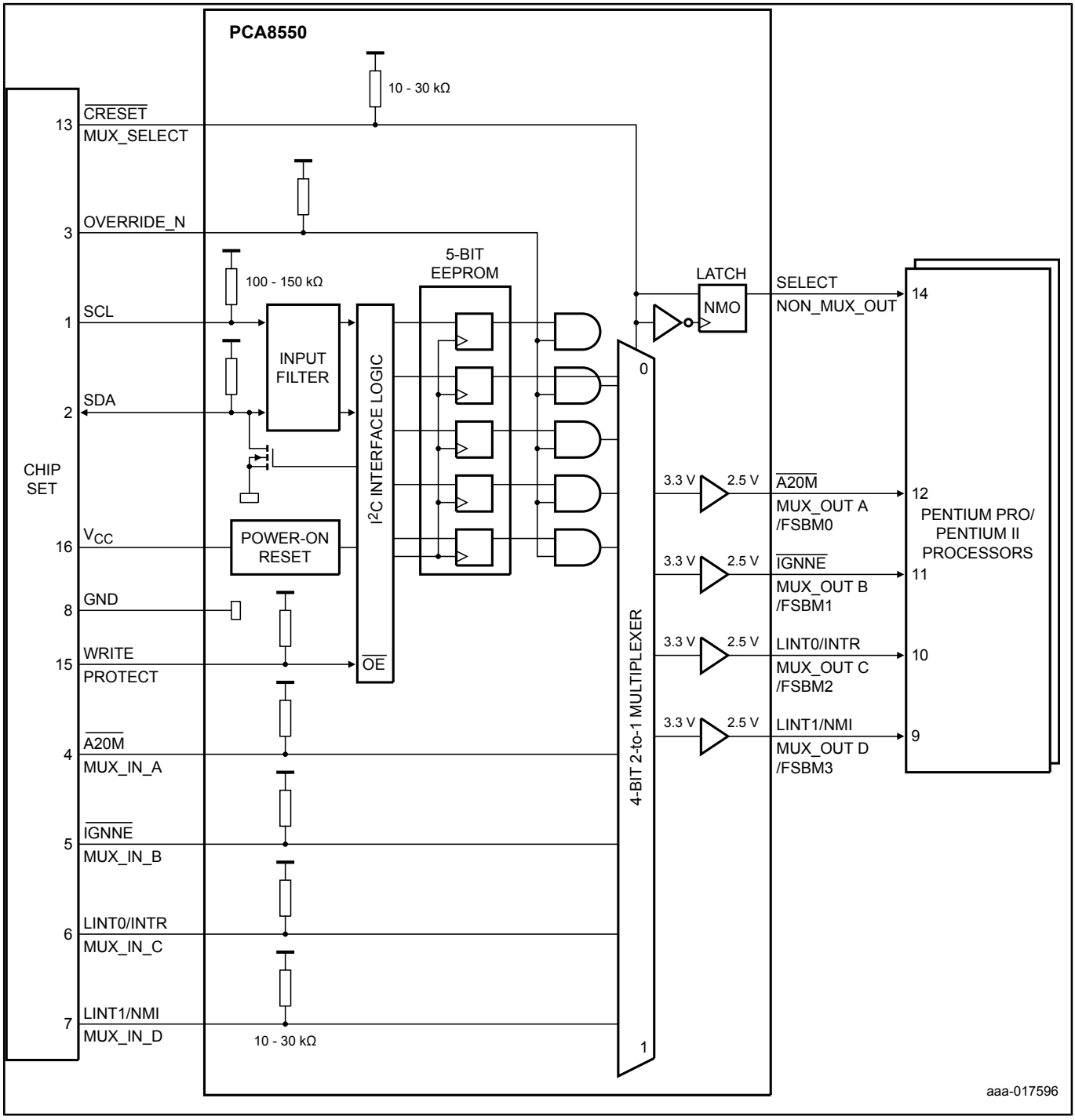

View additional information for 4位多路复用/1位闭锁的5位I2C EEPROM DIP开关.

Note: The information on this document is subject to change without notice.

www.nxp.com

NXP and the NXP logo are trademarks of NXP B.V. All other product or service names are the property of their respective owners. The related technology may be protected by any or all of patents, copyrights, designs and trade secrets. All rights reserved. © 2025 NXP B.V.